View this document in HTML
https://www.crestron.com/docs/9546

Product Manual

Cameo® 2

Custom Engravable In-Wall Dimmers, Switches, Keypads, and Accessories

Crestron Electronics, Inc.

Have feedback on this document? Contact docfeedback@crestron.com.

The original language version of this document is U.S. English.
All other languages are a translation of the original document.

Regulatory Model: M202311001, M202311002, M202311003, M202311004, M202311005, M202314002, M202314003

Crestron product development software is licensed to Crestron dealers and Crestron Service Providers (CSPs) under a limited nonexclusive, nontransferable Software Development Tools License Agreement. Crestron product operating system software is licensed to Crestron dealers, CSPs, and end-users under a separate End-User License Agreement. Both of these Agreements can be found on the Crestron website at www.crestron.com/legal/software_license_agreement.

The product warranty can be found at www.crestron.com/warranty.

The specific patents that cover Crestron products are listed online at www.crestron.com/legal/patents.

Certain Crestron products contain open source software. For specific information, please visit www.crestron.com/opensource.

Crestron, the Crestron logo, Cameo, Cresnet, Crestron Home, and infiNET EX are either trademarks or registered trademarks of Crestron Electronics, Inc. in the United States and/or other countries. SolaHD and SDP are either a trademark or registered trademark of APPLETON GRP LLC in the United States and/or other countries. Aeotec is either a trademark or registered trademark of Aeotec Limited in the United States and/or other countries. Intertek is either a trademark or registered trademark of Intertek Group in the United States and/or other countries. The ETL logo is either a trademark or a registered trademark of Intertek Testing Services NA in the United States and/or other countries. UL is either a trademark or a registered trademark of Underwriters Laboratories, Inc. in the United States and/or other countries. Other trademarks, registered trademarks, and trade names may be used in this document to refer to either the entities claiming the marks and names or their products. Crestron disclaims any proprietary interest in the marks and names of others. Crestron is not responsible for errors in typography or photography.

©2026 Crestron Electronics, Inc.

Contents

Cameo® 2 1

Features 2

CM2-AUX Features 3
CM2-DIMEX Features 5
CM2-DIMUEX Features 9
CM2-KPCN Features 13
CM2-KPFCN Features 16
CM2-KPEX Features 19
CM2-SWEX Features 23
CM2-BTN Features 27
CM2-FP Features 29

Specifications 30

CM2-AUX Specifications 31
Product Specifications 31
Dimension Drawings 32
CM2-DIMEX Specifications 33
Product Specifications 33
Dimension Drawings 35
CM2-DIMUEX Specifications 37
Product Specifications 37
Dimension Drawings 39
CM2-KPCN Specifications 42
Product Specifications 42
Dimension Drawings 44
CM2-KPFCN Specifications 45
Product Specifications 45
Dimension Drawings 47
CM2-KPEX Specifications 48
Product Specifications 48
Dimension Drawings 50
CM2-SWEX Specifications 54
Product Specifications 54
Dimension Drawings 56
CM2-BTN Specifications 60
Product Specifications 60
CM2-FP Specifications 62
Specifications 62
Dimension Drawings 63

Installation 67

In the Box 68
Installing Single Gang Cameo 2 Keypads 69
Installing the CM2-KPCN 72
Installing the CM2-KPFCN 74
Drywall 74
Backbox 77
Masonry 80
Wiring 81
Line Powered Devices 81
CM2-KPCN and CM2-KPFCN Wiring 83
CM2-BTN Installation 85
CM2-KPFCN 85
Air Gap Cover Installation 87

Configuration 90

Disconnect Power Locally 91
Backlight Color Theme 92
Dimmer Configuration 93
Dimming Mode 93
No Neutral Calibration 93
Wireless Communications 95
Joining an infiNET EX Network 95
Leaving an infiNET EX Network 95
Verifying Communications Status 95
Demo Mode 97
Entering 97
Exiting 97
Demo Mode Options 97

Troubleshooting 99

Resources 100

Crestron Support and Training 100
Programmer and Developer Resources 100
Product Certificates 100
Related Documentation 100

Cameo® 2

Cameo 2 Custom Engravable In-Wall Dimmers, Switches, Keypads, and Accessories provide control of lighting, shading, audio, and other amenities.

Features

This section provides the following information:

- CM2-AUX Features
- CM2-DIMEX Features
- CM2-DIMUEX Features
- CM2-KPCN Features
- CM2-KPFCN Features
- CM2-KPEX Features
- CM2-SWEX Features
- CM2-BTN Features
- CM2-FP Features

CM2-AUX Features

Key features include:

- Provides control to the connected dimmer or switch using a traveler wire in a traditional three- or four-way circuit (CM2-DIMEX, CM2-DIMUEX, and CM2-SWEX, all sold separately)
- Line based multiway control for reliability across all load types
- 1- to 4-gang U.S. wall box installation using Cameo® 2 multi-gang faceplates (CM2-FP-G series, sold separately) or any decorator-style faceplate
- Available in eight different color and finish options
- Preinstalled large rocker button with default engraving or can be configured with a large rocker button with custom engraving
- Field replaceable rockers available to accommodate changes in device function, color, or engravings
- Blank large rockers available for engraving by a third-party

The CM2-AUX Cameo® 2 in-wall multiway remote controls Cameo 2 dimmers and switches. Its design matches the entire line of Cameo 2 dimmers, switches, and keypads, making it a great addition to new or retrofit installations.

> **NOTE:** The CM2-AUX only accepts a rocker button and does not have an LED backlight. For multiway control using a device that accepts any style button and has LED backlighting, use a CM2-KPEX.

- CM2-AUX-RKR-W-S ships in White Smooth with a preinstalled large rocker button.

- CM2-AUX-RKR ENGRAVED can be configured with a large rocker button with custom engraving and is available in the following finishes (specified in the custom engravings file):
    - W-S: White Smooth
    - W-T: White Textured
    - B-S: Black Smooth
    - B-T: Black Textured
    - A-S: Almond Smooth
    - A-T: Almond Textured
    - G-S: Gray Smooth
    - G-T: Gray Textured

Engraving and finish options can be selected using the Impress Engraving Software, Crestron Home, or the Crestron Home Online Configurator.

Multiway Dimming and Switching

Similar to traditional three- or four-way circuits, the CM2-AUX lets you control the lights from multiple locations using the traveler wire. Up to four devices can be connected to a single dimmer or switch. The CM2-KPEX provides button backlights and full keypad options while the CM2-AUX provides no button backlight and only accomodates a single large rocker button. The multiway controller provides instant usability upon installation without the need for programming.

> **NOTE:** The CM2-AUX cannot be used to control a load directly. It must be used in conjunction with a CM2-DIMEX, CM2-DIMUEX, and CM2-SWEX (all sold separately).

Button Engraving

Functions of the rocker can be identified with custom, laser-etched engraving. Engraving is included with ENGRAVED models.

When a custom engraved model is ordered, the engraved buttons are installed on the device before it is shipped. Engraving files must be provided when ordering and can be created using Impress Custom Engraving Software, the Crestron Home® Setup app, or the Crestron Home Online Configurator. If necessary, custom engraving can be changed until the order is processed by emailing orders@crestron.com with the updated engraving file and order information.

To order replacement engravings, refer to the CM2-BTNS ENGRAVED buttons product page.

Multigang Expansion

Install Cameo® 2 devices side-by-side in a US multigang electrical box with a CM2-FP-G series faceplate or a third-party decorator faceplate.

Field Replaceable Buttons

Field-replaceable buttons allow for changes in device function or for the customer to use the system before finalizing the engravings. The buttons can be replaced with a custom engraved or blank CM2-BTNS rocker button.

Standard Wall Mount

Cameo 2 keypads fit standard US electrical wall boxes and all decorator form factor faceplates.

CM2-DIMEX Features

Key features include:

- Forward phase dimming
- Switching mode for nondimmable loads
- Supports multiway controllers that provide control using a traveler wire in a traditional three- or four-way circuit (CM2-AUX and CM2-KPEX, sold separately)
- 1- to 4-gang U.S. wall box installation using Cameo® 2 multi-gang faceplates (CM2-FP-G series, sold separately) or any decorator-style faceplate
- Robust infiNET EX® wireless communication
- Full color RGB LED backlight and indicators for engraved buttons
- Backlight and indicators capable of dynamically adjusting white between 2000K and 8000K
- Optionally engraved and separately backlit indicators available in two different aesthetics allowing a customized look and user experience
- Ambient light sensor for auto-dimming backlight with separate day and night modes
- Fully programmable via a Crestron control system
- Local load control without programming when using a rocker
- Works with or without neutral wire connection
- Crestron Home® OS compatible
- Available in eight different color and finish options
- RKR devices come with a large rocker button that either has standard engraving or can be customized
- Full keypad devices come with six buttons with default engraving, or can be customized with up to 136 button configurations and custom engraving
- Individually field replaceable buttons available to accommodate changes in device function, color, or engravings
- Blank buttons available for engraving by a third-party

The CM2-DIMEX Cameo® 2 in-wall forward phase dimmer provides infiNET EX® wireless network control of incandescent, magnetic low voltage, and tungsten-halogen loads. It can also control non-dim loads such as small exhaust fans. It has the ability to adjust minimum and maximum light levels and to set the dimming curve to be linear, logarithmic, or use a custom curve.

Its design matches the entire line of Cameo 2 dimmers, switches, and keypads, making it a great addition to new or retrofit installations.

- CM2-DIMEX-RKR-W-S ships in White Smooth with a preinstalled large rocker button with default engraving.
- CM2-DIMEX-W-S ships in White Smooth with six preinstalled buttons with default engraving.
- CM2-DIMEX-RKR ENGRAVED can be configured with a large rocker button with custom engraving.
- CM2-DIMEX ENGRAVED can be configured with one of up to 136 different button configurations with custom engraving.

ENGRAVED models are available in the following finishes (specified in the custom engravings file):

  - W-S: White Smooth
  - W-T: White Textured
  - B-S: Black Smooth
  - B-T: Black Textured
  - A-S: Almond Smooth
  - A-T: Almond Textured
  - G-S: Gray Smooth
  - G-T: Gray Textured

Integrated Keypad

Full keypad models support two to six buttons, with small, medium, and large button options. The bottom four buttons can function as side-to-side rockers via programming. RKR models only accept large rocker buttons. When connected to a Crestron control processor, the keypad can trigger remote actions.

Button Engraving

Functions of each button can be identified with custom, laser-etched engraving. Engraving is included with ENGRAVED models.

When a custom engraved model is ordered, the engraved buttons are installed on the device before it is shipped. Engraving files must be provided when ordering and can be created using Impress Custom Engraving Software, the Crestron Home® Setup app, or the Crestron Home Online Configurator. If necessary, custom engraving can be changed until the order is processed by emailing orders@crestron.com with the updated engraving file and order information.

To order replacement engravings, refer to the CM2-BTNS ENGRAVED buttons product page.

> **NOTE:** Buttons without engraving (BLANK models) are also available and can be used as is or can be custom engraved by a third-party engraver.

Multicolor Backlit Buttons and Indicators

Full keypad models have buttons with separately backlit custom engravings and indicators. Indicators are optional per button and can be engraved in a line or dot aesthetic. Custom engravings and indicators are illuminated using the device's RGB LED backlights. Each button and indicator can be assigned custom color backlighting.

Feedback can be provided through indicators, custom engravings, or both. Feedback can be performed by turning on or off, changing intensity, changing color, or flashing to show that an action is being performed. Backlighting and feedback colors can be adjusted using Crestron Home software or other Crestron programming tools.

RKR devices have the ability to use a bargraph instead of or in addition to separately backlit indicators. The bargraph is optional and can be engraved in a line or dot aesthetic. Remote or local level feedback can be provided through the bargraph all the time or temporarily when a change in level is detected.

Local color theme sets the colors for custom engravings and indicators on the device. Each backlit area can also be assigned an alternate color theme. Thirteen local color themes are available that include Tunable White (default is Warm White), Neutral White, Cool White, Dim to Warm, Circadian (through Crestron Home), and a variety of common and custom colors. The local and alternate color themes can be changed programmatically.

Field-Replaceable Buttons

Field-replaceable buttons allow for changes in device function or for the customer to use the system before finalizing the engravings. The buttons can be individually replaced with custom engraved or blank CM2-BTNS buttons.

> **NOTE: -RKR** (rocker) models only accept large rocker buttons.

Neutral Wire Optional

The CM2-DIMEX does not require a neutral wire, but Crestron recommends connecting one if it is present. Advanced features such as selectable device power modes and a no neutral max dim level calibration ensure compatibility with most load types. Certain LED loads may not function properly or may not dim high enough without a neutral wire at the dimmer. In this situation, a third-party load bypass (for example, Aeotec® Bypass ZW150-Z) may be installed at the load pursuant to the third-party manufacturer's specifications and instructions.

Ambient Light Sensor

To ensure optimal visibility under varying lighting conditions, the button backlighting and indicator intensity adjusts automatically according to the amount of ambient light in the room.

Multigang Expansion

Install Cameo® 2 devices side-by-side in a US multigang electrical box with a CM2-FP-G series faceplate or a third-party decorator faceplate.

Multiway Control

The CM2-DIMEX supports load control from multiple locations. Up to four CM2-AUX or CM2-KPEX devices (sold separately) can be connected to a traveler wire in a traditional three- or four-way circuit to control an attached load. The CM2-KPEX provides button backlights and full keypad options while the CM2-AUX provides no button backlight and only accommodates a single large rocker button.

Standard Wall Mount

Cameo 2 keypads fit standard US electrical wall boxes and all decorator form factor faceplates.

infiNET EX Communications

infiNET EX wireless technology provides two-way RF communications throughout a residential or commercial structure without the need for physical control wiring. Each infiNET EX device acts as an expander by sending command signals to other infiNET EX devices in range (approximately 150 ft (46 m) indoors) to ensure reliability and stability.

The device communicates with a control system via a Crestron Wireless Gateway (sold separately). Up to 100 infiNET EX devices may coexist on a wireless network.

> **NOTE:** Any infiNET EX device that provides expander functionality will effectively extend the range of the wireless network beyond the initial range of the gateway. Battery-powered infiNET EX devices do not provide expander functionality. A dedicated infiNET EX Wireless Expander is also available (CLW-EXPEX, sold separately).

CM2-DIMUEX Features

Key features include:

- Universal dimming - reverse phase and forward phase - with auto load detection
- Over current protection
- Supports multiway controllers that provide control using a traveler wire in a traditional three- or four-way circuit (CM2-AUX and CM2-KPEX, sold separately)
- 1- to 4-gang U.S. wall box installation using Cameo® 2 multi-gang faceplates (CM2-FP-G series, sold separately) or any decorator-style faceplate
- Robust infiNET EX® wireless communication
- Full color RGB LED backlight and indicators for engraved buttons
- Backlight and indicators capable of dynamically adjusting white between 2000K and 8000K
- Optionally engraved and separately backlit indicators available in two different aesthetics allowing a customized look and user experience
- Ambient light sensor for auto-dimming backlight with separate day and night modes
- Fully programmable via a Crestron control system
- Local load control without programming when using a rocker
- Works with or without neutral wire connection
- Crestron Home® OS compatible
- Available in eight different color and finish options
- RKR devices come with a large rocker button that either has standard engraving or can be customized
- Full keypad devices come with six buttons with default engraving, or can be customized with up to 136 button configurations and custom engraving
- Individually field replaceable buttons available to accommodate changes in device function, color, or engravings
- Blank buttons available for engraving by a third-party

The CM2-DIMUEX Cameo® 2 in-wall universal phase dimmer provides infiNET EX® wireless network control of LED, incandescent, magnetic low voltage, and electronic low voltage loads. It has the ability to adjust minimum and maximum light levels and to set the dimming curve to be linear, logarithmic, or use a custom curve. Its design matches the entire line of Cameo 2 dimmers, switches, and keypads, making it a great addition to new or retrofit installations.

- CM2-DIMUEX-RKR-W-S ships in White Smooth with a preinstalled large rocker button with default engraving.
- CM2-DIMUEX-W-S ships in White Smooth with six preinstalled buttons with default engraving.
- CM2-DIMUEX-RKR ENGRAVED can be configured with a large rocker button with custom engraving.
- CM2-DIMUEX ENGRAVED can be configured with one of up to 136 different button configurations with custom engraving.

ENGRAVED models are available in the following finishes (specified in the custom engravings file):

- W-S: White Smooth
- W-T: White Textured
- B-S: Black Smooth
- B-T: Black Textured
- A-S: Almond Smooth
- A-T: Almond Textured
- G-S: Gray Smooth
- G-T: Gray Textured

Universal Phase Dimming

The CM2-DIMUEX features auto-load detection to automatically select the appropriate dimming method for the attached load. Auto-load detection allows for broad load type compatibility even if the

load type is changed in the future.

Integrated Keypad

Full keypad models support two to six buttons, with small, medium, and large button options. The bottom four buttons can function as side-to-side rockers via programming. RKR models only accept large rocker buttons. When connected to a Crestron control processor, the keypad can trigger remote actions.

Button Engraving

Functions of each button can be identified with custom, laser-etched engraving. Engraving is included with ENGRAVED models.

When a custom engraved model is ordered, the engraved buttons are installed on the device before it is shipped. Engraving files must be provided when ordering and can be created using Impress Custom Engraving Software, the Crestron Home® Setup app, or the Crestron Home Online Configurator. If necessary, custom engraving can be changed until the order is processed by emailing orders@crestron.com with the updated engraving file and order information.

To order replacement engravings, refer to the CM2-BTNS ENGRAVED buttons product page.

> **NOTE:** Buttons without engraving (BLANK models) are also available and can be used as is or can be custom engraved by a third-party engraver.

Multicolor Backlit Buttons and Indicators

Full keypad models have buttons with separately backlit custom engravings and indicators. Indicators are optional per button and can be engraved in a line or dot aesthetic. Custom engravings and indicators are illuminated using the device's RGB LED backlights. Each button and indicator can be assigned custom color backlighting.

Feedback can be provided through indicators, custom engravings, or both. Feedback can be performed by turning on or off, changing intensity, changing color, or flashing to show that an action is being performed. Backlighting and feedback colors can be adjusted using Crestron Home software or other Crestron programming tools.

RKR devices have the ability to use a bargraph instead of or in addition to separately backlit indicators. The bargraph is optional and can be engraved in a line or dot aesthetic. Remote or local level feedback can be provided through the bargraph all the time or temporarily when a change in level is detected.

Local color theme sets the colors for custom engravings and indicators on the device. Each backlit area can also be assigned an alternate color theme. Thirteen local color themes are available that include Tunable White (default is Warm White), Neutral White, Cool White, Dim to Warm, Circadian (through Crestron Home), and a variety of common and custom colors. The local and alternate color themes can be changed programmatically.

Field-Replaceable Buttons

Field-replaceable buttons allow for changes in device function or for the customer to use the system before finalizing the engravings. The buttons can be individually replaced with custom engraved or blank CM2-BTNS buttons.

> **NOTE: -RKR** (rocker) models only accept large rocker buttons.

Neutral Wire Optional

The CM2-DIMUEX does not require a neutral wire, but Crestron recommends connecting one if it is present. Advanced features such as selectable device power modes and a no neutral max dim level calibration ensure compatibility with most load types. Certain LED loads may not function properly or may not dim high enough without a neutral wire at the dimmer. In this situation, a third-party load bypass (for example, Aeotec® Bypass ZW150-Z) may be installed at the load pursuant to the third-party manufacturer's specifications and instructions.

Multigang Expansion

Install Cameo® 2 devices side-by-side in a US multigang electrical box with a CM2-FP-G series faceplate or a third-party decorator faceplate.

Ambient Light Sensor

To ensure optimal visibility under varying lighting conditions, the button backlighting and indicator intensity adjusts automatically according to the amount of ambient light in the room.

Multiway Control

The CM2-DIMUEX supports load control from multiple locations. Up to four CM2-AUX or CM2-KPEX devices (sold separately) can be connected to a traveler wire in a traditional three- or four-way circuit to control an attached load. The CM2-KPEX provides button backlights and full keypad options while the CM2-AUX provides no button backlight and only accommodates a single large rocker button.

Standard Wall Mount

Cameo 2 keypads fit standard US electrical wall boxes and all decorator form factor faceplates.

infiNET EX Communications

infiNET EX wireless technology provides two-way RF communications throughout a residential or commercial structure without the need for physical control wiring. Each infiNET EX device acts as an expander by sending command signals to other infiNET EX devices in range (approximately 150 ft (46 m) indoors) to ensure reliability and stability.

The device communicates with a control system via a Crestron Wireless Gateway (sold separately). Up to 100 infiNET EX devices may coexist on a wireless network.

> **NOTE:** Any infiNET EX device that provides expander functionality will effectively extend the range of the wireless network beyond the initial range of the gateway. Battery-powered infiNET EX devices do not provide expander functionality. A dedicated infiNET EX Wireless Expander is also available (CLW-EXPEX, sold separately).

CM2-KPCN Features

Key features include:

- 1- to 4-gang U.S. wall box installation using Cameo® 2 multi-gang faceplates (CM2-FP-G series, sold separately) or any decorator-style faceplate
- Full color RGB LED backlight and indicators for engraved buttons
- Backlight and indicators capable of dynamically adjusting white between 2000K and 8000K
- Optionally engraved and separately backlit indicators available in two different aesthetics allowing a customized look and user experience
- Ambient light sensor for auto-dimming backlight with separate day and night modes
- Fully programmable via a Crestron control system
- Crestron Home® OS compatible
- Dual Cresnet® ports for easy daisy-chaining
- Two control input ports for external sensors, including 10K NTC temperature sensors.
- Available in eight different color and finish options
- Preinstalled with six buttons with default engraving or can be configured with one of up to 136 different button configurations with custom engraving
- Individually field replaceable buttons available to accommodate changes in device function, color, or engravings
- Blank buttons available for engraving by a third-party

The CM2-KPCN Cameo® 2 keypad provides Cresnet® network control of lighting, shading, audio, and other amenities. Its design matches the entire line of Cameo 2 dimmers, switches, and keypads, making it a great addition to new installations.

- CM2-KPCN-W-S ships in White Smooth with six preinstalled buttons with default engraving.
- CM2-KPCN ENGRAVED can be configured with one of up to 136 different button configurations with custom engraving.

ENGRAVED models are available in the following finishes (specified in the custom engravings file):

  - W-S: White Smooth
  - W-T: White Textured
  - B-S: Black Smooth
  - B-T: Black Textured
  - A-S: Almond Smooth
  - A-T: Almond Textured
  - G-S: Gray Smooth
  - G-T: Gray Textured

Integrated Keypad

The CM2-KPCN supports two to six buttons, with small, medium, and large button options. The bottom four buttons can function as side-to-side rockers via programming. When connected to a Crestron control processor, the keypad can trigger remote actions.

Button Engraving

Functions of each button can be identified with custom, laser-etched engraving. Engraving is included with ENGRAVED models.

When a custom engraved model is ordered, the engraved buttons are installed on the device before it is shipped. Engraving files must be provided when ordering and can be created using Impress Custom Engraving Software, the Crestron Home® Setup app, or the Crestron Home Online Configurator. If necessary, custom engraving can be changed until the order is processed by emailing orders@crestron.com with the updated engraving file and order information.

To order replacement engravings, refer to the CM2-BTNS ENGRAVED buttons product page.

> **NOTE:** Buttons without engraving (BLANK models) are also available and can be used as is or can be custom engraved by a third-party engraver.

Multicolor Backlit Buttons and Indicators

Full keypad models have buttons with separately backlit custom engravings and indicators. Indicators are optional per button and can be engraved in a line or dot aesthetic. Custom engravings and indicators are illuminated using the device's RGB LED backlights. Each button and indicator can be assigned custom color backlighting.

Feedback can be provided through indicators, custom engravings, or both. Feedback can be performed by turning on or off, changing intensity, changing color, or flashing to show that an action is being performed. Backlighting and feedback colors can be adjusted using Crestron Home software or other Crestron programming tools.

Local color theme sets the colors for custom engravings and indicators on the device. Each backlit area can also be assigned an alternate color theme. Thirteen local color themes are available that include

Tunable White (default is Warm White), Neutral White, Cool White, Dim to Warm, Circadian (through Crestron Home), and a variety of common and custom colors. The local and alternate color themes can be changed programmatically.

Field-Replaceable Buttons

Field-replaceable buttons allow for changes in device function or for the customer to use the system before finalizing the engravings. The buttons can be individually replaced with custom engraved or blank CM2-BTNS buttons.

Multigang Expansion

Install Cameo® 2 devices side-by-side in a US multigang electrical box with a CM2-FP-G series faceplate or a third-party decorator faceplate.

Ambient Light Sensor

To ensure optimal visibility under varying lighting conditions, the button backlighting and indicator intensity adjusts automatically according to the amount of ambient light in the room.

Built-In Control Ports

Two digital/analog input ports are included on the keypad to provide a local interface for Crestron occupancy sensors, daylight sensors, and other devices that provide a contact closure, DC logic, or 0–10VDC. Using the control ports, it is possible to add room occupancy, ambient light level, door closures, and other conditional monitoring without additional wiring. These ports can also be used to read temperature from one 10K NTC temperature sensor per port.

Standard Wall Mount

Cameo 2 keypads fit standard US electrical wall boxes and all decorator form factor faceplates.

Cresnet Wired Communications

The keypad communicates with a Crestron control system via Cresnet, a 4-wire network bus that provides bidirectional data communication and 24VDC power to each keypad in the system. To simplify wiring in a multigang arrangement, the keypad includes dual parallel Cresnet ports for daisy-chaining.

CM2-KPFCN Features

Key features include:

- Full color RGB LED backlight and indicators for engraved buttons
- Backlight and indicators capable of dynamically adjusting white between 2000K and 8000K
- Optionally engraved and separately backlit indicators available in two different aesthetics allowing a customized look and user experience
- Ambient light sensor for auto-dimming backlight with separate day and night modes
- Fully programmable via a Crestron control system
- Crestron Home® OS compatible
- Dual Cresnet® ports for easy daisy-chaining
- Two control input ports for external sensors, including 10K NTC temperature sensors.
- Preinstalled with six buttons with default engraving or can be configured with one of up to 136 different button configurations with custom engraving

The CM2-KPFCN Cameo® 2 flush keypad provides Cresnet® network control of lighting, shading, audio, and other amenities. Its design matches the entire line of Cameo 2 dimmers, switches, and keypads, making it a great addition to new installations.

- CM2-KPFCN-W-T ships in White Textured with six preinstalled buttons with default engraving.
- CM2-KPFCN ENGRAVED can be configured with one of up to 136 different button configurations with custom engraving.

ENGRAVED models are available in the following finishes (specified in the custom engravings file):

- W-T: White Textured
- B-T: Black Textured
- A-T: Almond Textured
- G-T: Gray Textured

Integrated Keypad

The supports two to six buttons, with small, medium, and large button options. The bottom four buttons can function as side-to-side rockers via programming. When connected to a Crestron control processor, the keypad can trigger remote actions.

Button Engraving

Functions of each button can be identified with custom, laser-etched engraving. Engraving is included with ENGRAVED models.

When a custom engraved model is ordered, the engraved buttons are installed on the device before it is shipped. Engraving files must be provided when ordering and can be created using Impress Custom Engraving Software, the Crestron Home® Setup app, or the Crestron Home Online Configurator. If necessary, custom engraving can be changed until the order is processed by emailing orders@crestron.com with the updated engraving file and order information.

Multicolor Backlit Buttons and Indicators

Full keypad models have buttons with separately backlit custom engravings and indicators. Indicators are optional per button and can be engraved in a line or dot aesthetic. Custom engravings and indicators are illuminated using the device's RGB LED backlights. Each button and indicator can be assigned custom color backlighting.

Feedback can be provided through indicators, custom engravings, or both. Feedback can be performed by turning on or off, changing intensity, changing color, or flashing to show that an action is being performed. Backlighting and feedback colors can be adjusted using Crestron Home software or other Crestron programming tools.

Local color theme sets the colors for custom engravings and indicators on the device. Each backlit area can also be assigned an alternate color theme. Thirteen local color themes are available that include Tunable White (default is Warm White), Neutral White, Cool White, Dim to Warm, Circadian (through Crestron Home), and a variety of common and custom colors. The local and alternate color themes can be changed programmatically.

Field-Replaceable Buttons

Ambient Light Sensor

To ensure optimal visibility under varying lighting conditions, the button backlighting and indicator intensity adjusts automatically according to the amount of ambient light in the room.

Built-In Control Ports

Two digital/analog input ports are included on the keypad to provide a local interface for Crestron occupancy sensors, daylight sensors, and other devices that provide a contact closure, DC logic, or 0–10VDC. Using the control ports, it is possible to add room occupancy, ambient light level, door closures, and other conditional monitoring without additional wiring. These ports can also be used to read temperature from one 10K NTC temperature sensor per port.

Wall Mounting Options

The CM2-KPFCN has integrated spring clips that allow installation directly into a drywall cutout that can be made with a shipwith template. The MMK-CM2-KPFCN mud mounting kit (sold separately) can be used over the cutout for reinforcement or to ensure a proper size. The CM2-KPFCN can also install directly into some standard single gang metal boxes using the integrated spring clips. If the backbox is too large or the cutout around the backbox is oversized, the MMK-CM2-KPFCN mud mounting kit (sold separately) can be used with the backbox. For masonry installs, use the BB-CM2-KPFCN backbox (sold separately).

Cresnet Wired Communications

The keypad communicates with a Crestron control system via Cresnet, a 4-wire network bus that provides bidirectional data communication and 24VDC power to each keypad in the system. To simplify wiring in a multigang arrangement, the keypad includes dual parallel Cresnet ports for daisy-chaining.

CM2-KPEX Features

Key features include:

- Provides control to the connected dimmer or switch using a traveler wire in a traditional three- or four-way circuit (CM2-DIMEX, CM2-DIMUEX, and CM2-SWEX, all sold separately)
- Capable of being powered by either 120VAC line voltage or 60VDC low voltage (sold separately)
- Line based multiway control for reliability across all load types
- 1- to 4-gang U.S. wall box installation using Cameo® 2 multi-gang faceplates (CM2-FP-G series, sold separately) or any decorator-style faceplate
- Robust infiNET EX® wireless communication
- Full color RGB LED backlight and indicators for engraved buttons
- Backlight and indicators capable of dynamically adjusting white between 2000K and 8000K
- Optionally engraved and separately backlit indicators available in two different aesthetics allowing a customized look and user experience
- Ambient light sensor for auto-dimming backlight with separate day and night modes
- Fully programmable via a Crestron control system
- Local load control without programming when using a rocker
- Requires neutral wire connection
- Crestron Home® OS compatible
- Available in eight different color and finish options
- RKR devices come with a large rocker button that either has standard engraving or can be customized
- Full keypad devices come with six buttons with default engraving, or can be customized with up to 136 button configurations and custom engraving
- Individually field replaceable buttons available to accommodate changes in device function, color, or engravings
- Blank buttons available for engraving by a third-party

The CM2-KPEX Cameo® 2 keypad provides infiNET EX® wireless network control of lighting, shading, audio, and other amenities. Its design matches the entire line of Cameo 2 dimmers, switches, and keypads, making it a great addition to new or retrofit installations.

- CM2-KPEX-RKR-W-S ships in White Smooth with a preinstalled large rocker button with default engraving.
- CM2-KPEX-W-S ships in White Smooth with six preinstalled buttons with default engraving.
- CM2-KPEX-RKR ENGRAVED can be configured with a large rocker button with custom engraving.
- CM2-KPEX ENGRAVED can be configured with one of up to 136 different button configurations with custom engraving.

ENGRAVED models are available in the following finishes (specified in the custom engravings file):

  - W-S: White Smooth
  - W-T: White Textured
  - B-S: Black Smooth
  - B-T: Black Textured
  - A-S: Almond Smooth
  - A-T: Almond Textured
  - G-S: Gray Smooth
  - G-T: Gray Textured

Integrated Keypad

Full keypad models support two to six buttons, with small, medium, and large button options. The bottom four buttons can function as side-to-side rockers via programming. RKR models only accept large rocker buttons. When connected to a Crestron control processor, the keypad can trigger remote actions.

Button Engraving

Functions of each button can be identified with custom, laser-etched engraving. Engraving is included with ENGRAVED models.

When a custom engraved model is ordered, the engraved buttons are installed on the device before it is shipped. Engraving files must be provided when ordering and can be created using Impress Custom Engraving Software, the Crestron Home® Setup app, or the Crestron Home Online Configurator. If necessary, custom engraving can be changed until the order is processed by emailing orders@crestron.com with the updated engraving file and order information.

To order replacement engravings, refer to the CM2-BTNS ENGRAVED buttons product page.

> **NOTE:** Buttons without engraving (BLANK models) are also available and can be used as is or can be custom engraved by a third-party engraver.

Multicolor Backlit Buttons and Indicators

Full keypad models have buttons with separately backlit custom engravings and indicators. Indicators are optional per button and can be engraved in a line or dot aesthetic. Custom engravings and indicators are illuminated using the device's RGB LED backlights. Each button and indicator can be assigned custom color backlighting.

Feedback can be provided through indicators, custom engravings, or both. Feedback can be performed by turning on or off, changing intensity, changing color, or flashing to show that an action is being performed. Backlighting and feedback colors can be adjusted using Crestron Home software or other Crestron programming tools.

RKR devices have the ability to use a bargraph instead of or in addition to separately backlit indicators. The bargraph is optional and can be engraved in a line or dot aesthetic. Remote or local level feedback can be provided through the bargraph all the time or temporarily when a change in level is detected.

Local color theme sets the colors for custom engravings and indicators on the device. Each backlit area can also be assigned an alternate color theme. Thirteen local color themes are available that include Tunable White (default is Warm White), Neutral White, Cool White, Dim to Warm, Circadian (through Crestron Home), and a variety of common and custom colors. The local and alternate color themes can be changed programmatically.

Field-Replaceable Buttons

Field-replaceable buttons allow for changes in device function or for the customer to use the system before finalizing the engravings. The buttons can be individually replaced with custom engraved or blank CM2-BTNS buttons.

> **NOTE: -RKR** (rocker) models only accept large rocker buttons.

Multigang Expansion

Install Cameo® 2 devices side-by-side in a US multigang electrical box with a CM2-FP-G series faceplate or a third-party decorator faceplate.

Ambient Light Sensor

To ensure optimal visibility under varying lighting conditions, the button backlighting and indicator intensity adjusts automatically according to the amount of ambient light in the room.

Multiway Control

Similar to traditional three- or four-way circuits, the CM2-KPEX lets you control the lights from multiple locations using the traveler wire. Up to four devices can be connected to a single dimmer or switch. The CM2-KPEX provides button backlights and full keypad options while the CM2-AUX provides no button backlight and only accommodates a single large rocker button. The multiway controller provides instant usability upon installation without the need for programming.

> **NOTE:** The CM2-KPEX cannot be used to control a load directly. It must be used in conjunction with a CM2-DIMEX, CM2-DIMUEX, and CM2-SWEX (all sold separately).

Standard Wall Mount

Cameo 2 keypads fit standard US electrical wall boxes and all decorator form factor faceplates.

infiNET EX Communications

infiNET EX wireless technology provides two-way RF communications throughout a residential or commercial structure without the need for physical control wiring. Each infiNET EX device acts as an expander by sending command signals to other infiNET EX devices in range (approximately 150 ft (46 m) indoors) to ensure reliability and stability.

The device communicates with a control system via a Crestron Wireless Gateway (sold separately). Up to 100 infiNET EX devices may coexist on a wireless network.

> **NOTE:** Any infiNET EX device that provides expander functionality will effectively extend the range of the wireless network beyond the initial range of the gateway. Battery-powered infiNET EX devices do not provide expander functionality. A dedicated infiNET EX Wireless Expander is also available (CLW-EXPEX, sold separately).

CM2-SWEX Features

Key features include:

- Control non-dim loads with an integrated relay
- Supports multiway controllers that provide control using a traveler wire in a traditional three- or four-way circuit (CM2-AUX and CM2-KPEX, sold separately)
- 1- to 4-gang U.S. wall box installation using Cameo® 2 multi-gang faceplates (CM2-FP-G series, sold separately) or any decorator-style faceplate
- Robust infiNET EX® wireless communication
- Full color RGB LED backlight and indicators for engraved buttons
- Backlight and indicators capable of dynamically adjusting white between 2000K and 8000K
- Optionally engraved and separately backlit indicators available in two different aesthetics allowing a customized look and user experience
- Ambient light sensor for auto-dimming backlight with separate day and night modes
- Fully programmable via a Crestron control system
- Local load control without programming when using a rocker
- Requires neutral wire connection
- Crestron Home® OS compatible
- Available in eight different color and finish options
- RKR devices come with a large rocker button that either has standard engraving or can be customized
- Full keypad devices come with six buttons with default engraving, or can be customized with up to 136 button configurations and custom engraving
- Individually field replaceable buttons available to accommodate changes in device function, color, or engravings
- Blank buttons available for engraving by a third-party

The CM2-SWEX Cameo® 2 in-wall switch provides infiNET EX® wireless network control of incandescent, magnetic low voltage, and tungsten-halogen loads as well as electronic ballasts and 1/2 HP motors. Its design matches the entire line of Cameo 2 dimmers, switches, and keypads, making it a great addition to new or retrofit installations.

- CM2-SWEX-RKR-W-S ships in White Smooth with a preinstalled large rocker button with default engraving.
- CM2-SWEX-W-S ships in White Smooth with six preinstalled buttons with default engraving.
- CM2-SWEX-RKR ENGRAVED can be configured with a large rocker button with custom engraving.
- CM2-SWEX ENGRAVED can be configured with one of up to 136 different button configurations with custom engraving.

ENGRAVED models are available in the following finishes (specified in the custom engravings file):

  - W-S: White Smooth
  - W-T: White Textured
  - B-S: Black Smooth
  - B-T: Black Textured
  - A-S: Almond Smooth
  - A-T: Almond Textured
  - G-S: Gray Smooth
  - G-T: Gray Textured

Integrated Keypad

Full keypad models support two to six buttons, with small, medium, and large button options. The bottom four buttons can function as side-to-side rockers via programming. RKR models only accept

large rocker buttons. When connected to a Crestron control processor, the keypad can trigger remote actions.

Button Engraving

Functions of each button can be identified with custom, laser-etched engraving. Engraving is included with ENGRAVED models.

When a custom engraved model is ordered, the engraved buttons are installed on the device before it is shipped. Engraving files must be provided when ordering and can be created using Impress Custom Engraving Software, the Crestron Home® Setup app, or the Crestron Home Online Configurator. If necessary, custom engraving can be changed until the order is processed by emailing orders@crestron.com with the updated engraving file and order information.

To order replacement engravings, refer to the CM2-BTNS ENGRAVED buttons product page.

> **NOTE:** Buttons without engraving (BLANK models) are also available and can be used as is or can be custom engraved by a third-party engraver.

Multicolor Backlit Buttons and Indicators

Full keypad models have buttons with separately backlit custom engravings and indicators. Indicators are optional per button and can be engraved in a line or dot aesthetic. Custom engravings and indicators are illuminated using the device's RGB LED backlights. Each button and indicator can be assigned custom color backlighting.

Feedback can be provided through indicators, custom engravings, or both. Feedback can be performed by turning on or off, changing intensity, changing color, or flashing to show that an action is being performed. Backlighting and feedback colors can be adjusted using Crestron Home software or other Crestron programming tools.

RKR devices have the ability to use a bargraph instead of or in addition to separately backlit indicators. The bargraph is optional and can be engraved in a line or dot aesthetic. Remote or local level feedback can be provided through the bargraph all the time or temporarily when a change in level is detected.

Local color theme sets the colors for custom engravings and indicators on the device. Each backlit area can also be assigned an alternate color theme. Thirteen local color themes are available that include Tunable White (default is Warm White), Neutral White, Cool White, Dim to Warm, Circadian (through Crestron Home), and a variety of common and custom colors. The local and alternate color themes can be changed programmatically.

Field-Replaceable Buttons

Field-replaceable buttons allow for changes in device function or for the customer to use the system before finalizing the engravings. The buttons can be individually replaced with custom engraved or blank CM2-BTNS buttons.

> **NOTE: -RKR** (rocker) models only accept large rocker buttons.

Multigang Expansion

Install Cameo® 2 devices side-by-side in a US multigang electrical box with a CM2-FP-G series faceplate or a third-party decorator faceplate.

Ambient Light Sensor

To ensure optimal visibility under varying lighting conditions, the button backlighting and indicator intensity adjusts automatically according to the amount of ambient light in the room.

Multiway Control

The CM2-SWEX supports load control from multiple locations. Up to four CM2-AUX or CM2-KPEX devices (sold separately) can be connected to a traveler wire in a traditional three- or four-way circuit to control an attached load. The CM2-KPEX provides button backlights and full keypad options while the CM2-AUX provides no button backlight and only accommodates a single large rocker button.

Standard Wall Mount

Cameo 2 keypads fit standard US electrical wall boxes and all decorator form factor faceplates.

infiNET EX Communications

infiNET EX wireless technology provides two-way RF communications throughout a residential or commercial structure without the need for physical control wiring. Each infiNET EX device acts as an expander by sending command signals to other infiNET EX devices in range (approximately 150 ft (46 m) indoors) to ensure reliability and stability.

The device communicates with a control system via a Crestron Wireless Gateway (sold separately). Up to 100 infiNET EX devices may coexist on a wireless network.

> **NOTE:** Any infiNET EX device that provides expander functionality will effectively extend the range of the wireless network beyond the initial range of the gateway. Battery-powered infiNET EX devices do not provide expander functionality. A dedicated infiNET EX Wireless Expander is also available (CLW-EXPEX, sold separately).

CM2-BTN Features

Key features include:

- Replacement buttons for Cameo® 2 dimmers, switches, and keypads
- Available blank or with custom engraving
- Engraved buttons and indicators can be backlit by a Cameo 2 dimmer, switch, or keypad
- Buttons are individually field-replaceable without removing the device from the wall
- Available in eight different color and finish options
- Available in four sizes: rocker, large, medium, and small

CM2-BTN replacement buttons are used with Cameo 2 dimmers, switches, and keypads. They are available in small, medium, large, and rocker sizes in all Cameo 2 colors.

Functions of each button can be identified with custom, laser-etched engraving. Engraving is included with ENGRAVED models.

Engraving files must be provided when ordering and can be created using Impress Custom Engraving Software, the Crestron Home® Setup app, or the Crestron Home Online Configurator. If necessary, custom engraving can be changed until the order is processed by emailing orders@crestron.com with the updated engraving file and order information.

Full keypad models have buttons with separately backlit custom engravings and indicators. Indicators are optional per button and can be engraved in a line or dot aesthetic. Custom engravings and indicators are illuminated using the device's RGB LED backlights. Each button and indicator can be assigned custom color backlighting.

Feedback can be provided through indicators, custom engravings, or both. Feedback can be performed by turning on or off, changing intensity, changing color, or flashing to show that an action is being performed. Backlighting and feedback colors can be adjusted using Crestron Home software or other Crestron programming tools.

RKR devices have the ability to use a bargraph instead of or in addition to separately backlit indicators. The bargraph is optional and can be engraved in a line or dot aesthetic. Remote or local level feedback can be provided through the bargraph all the time or temporarily when a change in level is detected.

Local color theme sets the colors for custom engravings and indicators on the device. Each backlit area can also be assigned an alternate color theme. Thirteen local color themes are available that include Tunable White (default is Warm White), Neutral White, Cool White, Dim to Warm, Circadian (through Crestron Home), and a variety of common and custom colors. The local and alternate color themes can be changed programmatically.

Field-replaceable buttons allow for changes in device function or for the customer to use the system before finalizing the engravings. The buttons can be individually replaced with custom engraved or blank CM2-BTNS buttons.

> **NOTE: -RKR** (rocker) models only accept large rocker buttons.

Small (**-SM**) buttons (shown White Smooth with custom engraving):

Medium (**-MD**) buttons (shown White Smooth with custom engraving):

Engravings can be positioned at the top or bottom of the medium button.

Large (**-LG**) buttons (shown White Smooth with custom engraving):

Engravings can be positioned at the top, middle, or bottom of the large button.

Rocker (**-RKR**) buttons (show White Smooth with custom engraving):

CM2-FP Features

Key features include:

- Precision fit and finish for Cameo 2 devices
- Available in 1, 2, 3, and 4 gang sizes
- Eight different color and finish options that match all other Cameo 2 devices
- Standard decorator openings accommodate any decorator style device

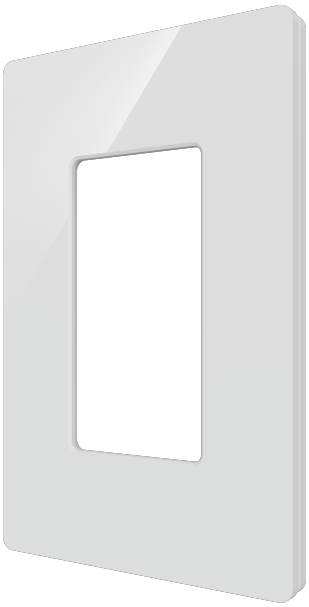

Cameo® 2 faceplates (CM2-FP-G series) provide a finished appearance with customizable design elements. Each faceplate features side panels that match the keypad's textured button faces to provide a clean, contiguous surface from edge to edge.

The following finishes are available:

- W-S: White Smooth
- W-T: White Textured
- B-S: Black Smooth
- B-T: Black Textured
- A-S: Almond Smooth
- A-T: Almond Textured
- G-S: Gray Smooth
- G-T: Gray Textured

Install Cameo® 2 devices side-by-side in a US multigang electrical box with a CM2-FP-G series faceplate or a third-party decorator faceplate.

Specifications

This section provides the following information:

- CM2-AUX Specifications
- CM2-DIMEX Specifications
- CM2-DIMUEX Specifications
- CM2-KPCN Specifications
- CM2-KPFCN Specifications
- CM2-KPEX Specifications
- CM2-SWEX Specifications
- CM2-BTN Specifications
- CM2-FP Specifications

CM2-AUX Specifications

Product specifications for the CM2-AUX are provided below.

Product Specifications

Power Requirements

Powered via connection to REMOTE terminal of a CM2-DIMEX, CM2-DIMUEX, CM2-SWEX, and line power input

Controls

Buttons	Large rocker
	NOTE: The CM2-AUX cannot be used to control a load directly. It must be used in conjunction with a CM2-DIMEX, CM2-DIMUEX, or CM2-SWEX.
Button Events	Programmable for Normal, Tap, Double-Tap, and Press and Hold
Button Caps	Includes one large rocker; ENGRAVED models include custom engraved large rocker

Connections

HOT	(1) 14-12 AWG, screw terminal, black, line power input
REM	(1) 14-12 AWG, screw terminal, blue, remote
GND	(1) 14-12 AWG, screw terminal, green, earth

Environmental

Temperature	32° to 86°F (0 °to 30°C)
Humidity	10% to 95% RH (noncondensing)
Pollution Degree	2

Construction

Mounting	Mounts into any gang U.S. electrical box; 3.5 in. (89 mm) electrical box depth recommended

Dimensions

Height	4.06 in. (103 mm)
Width	1.75 in. (45 mm)
Depth	1.59 in. (40 mm)

Compliance

Regulatory Model: M202311005

FCC Part 15 Class B, IC Class B, CE, Intertek® Listed for US and Canada

Dimension Drawings

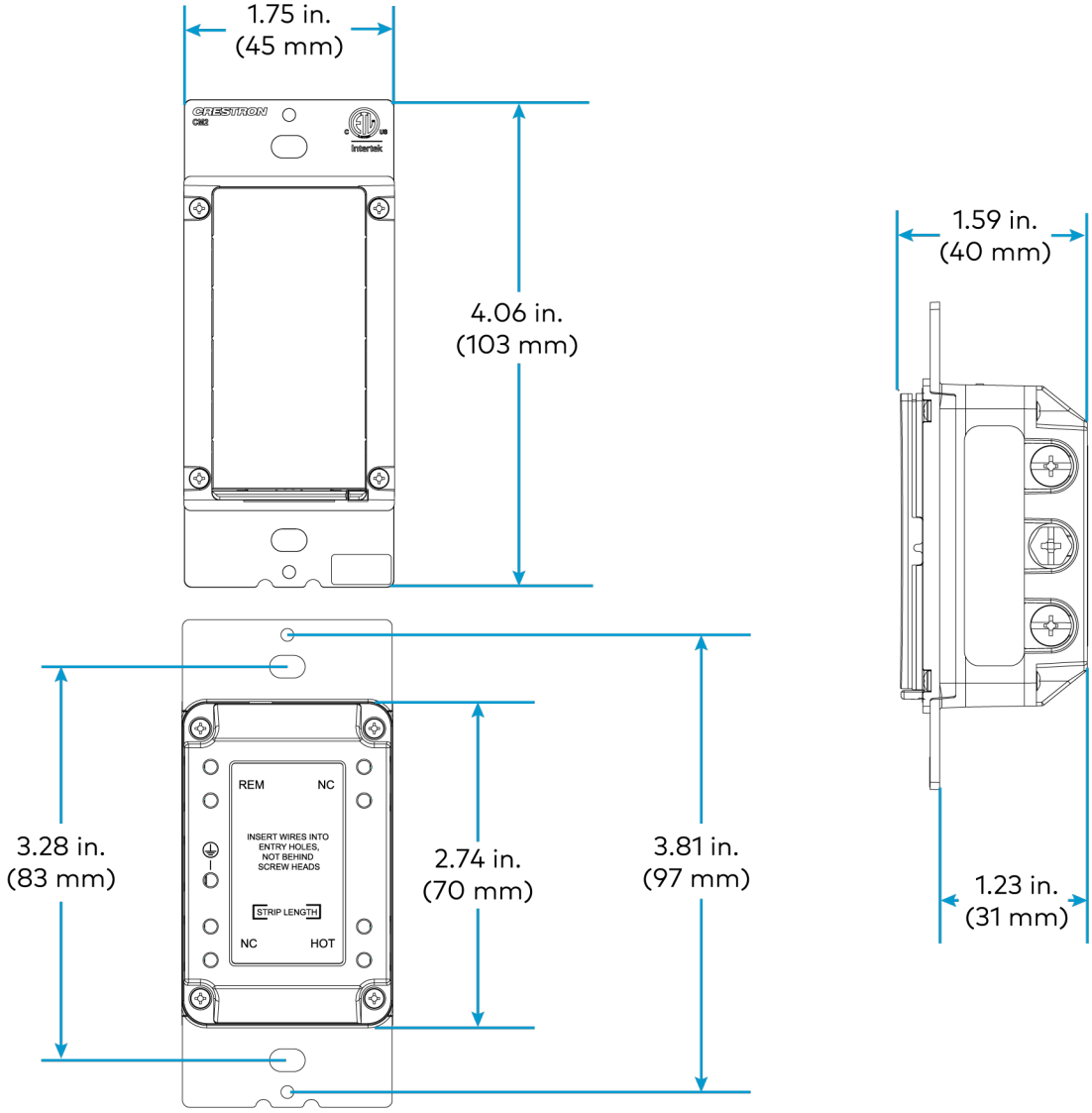

CM2-DIMEX Specifications

Product specifications for the CM2-DIMEX are provided below.

Product Specifications

Load Requirements

Incandescent, Tungsten Halogen, Magnetic Ballast, Electronic Ballasts, CFL, LED	600 W/VA @ 100VAC; 750 W/VA @ 120-240VAC; No minimum load with neutral
No Neutral Minimum Load[1]	5 W Incandescent; 2 Bulbs[2] LED
Motor	1/4 HP

Power Requirements

Line Power	100-240 VAC, 50/60 Hz
Overvoltage Category	III

Controls

Buttons	RKR models: Large rocker Full keypad models: 2 to 6 buttons programmable via control system; The bottom 4 buttons can be programmed to be side to side rockers.
Button Events	Programmable for Normal, Tap, Double-Tap, and Press and Hold
Button Caps	RKR models include one large rocker; Standard engraved full keypad models include 6 small buttons; ENGRAVED models include custom engraving on small, medium, or large button types in any available combination.RKR models are limited to large rockers.

LED Indicator

Feedback (-RKR)	(3) RGB backlit text regions; Full RGB backlit bargraph that can also function as 3 RGB indicator regions
Feedback (Full Keypad)	(6) RGB backlit text regions and 6 RGB indicator regions

Wireless

RF Transceiver	infiNET EX® 2-way RF, 2.4 GHz ISM Channels 11-26 (2400 to 2483.5 MHz); Default channel 15; IEEE 802.15.4 compliant

Range (typical)	150 ft (46 m) indoor, 250 ft (76 m) outdoor to nearest mesh network device (s); Subject to site-specific conditions and individual device capabilities
Gateway	Requires a Crestron Wireless Gateway (sold separately)

Connections

HOT	(1) 14-12 AWG, screw terminal, black, line power input
REM	(1) 14-12 AWG, screw terminal, blue, remote
LOAD	(1) 14-12 AWG, screw terminal, brass, load output
NEU	(1) 14-12 AWG, screw terminal, silver, neutral; Neutral wire connection is optional, but is recommended for best performance.
GND	(1) 14-12 AWG, screw terminal, green, earth

Environmental

Temperature	32° to 86°F (0 °to 30°C)
Humidity	10% to 95% RH (noncondensing)
Pollution Degree	2

Construction

Mounting	Mounts into any gang U.S. electrical box; 3.5 in. (89 mm) electrical box depth recommended; Derating required in multigang applications. Refer to the product manual for details.

Dimensions

Height	4.06 in. (103 mm)
Width	1.75 in. (45 mm)
Depth	1.59 in. (40 mm)

Compliance

Regulatory Model: M202311002

FCC Part 15 Class B, IC Class B, CE, Intertek® Listed for US and Canada

Notes:

1. The dimmer has five settable power modes to optimize no neutral performance: Normal, Low Power with Aux, Low Power without Aux, Lowest Power with Aux, and Lowest Power without Aux. The specified minimum loads are with the default Low Power with Aux no neutral power mode. No neutral calibration sets the maximum dim level possible with the connected load. The minimum load varies depending on power mode selection and maximum dim level desired.
2. No neutral performance with LED loads varies manufacturer to manufacturer. You may need to select a lower power mode and rerun the no neutral calibration. In some situations, a third-party load bypass (for example, Aeotec® Bypass ZW150-Z) may need to be installed at the load pursuant to the third-party manufacturer's specifications and instructions.

Dimension Drawings

Full Keypad Model

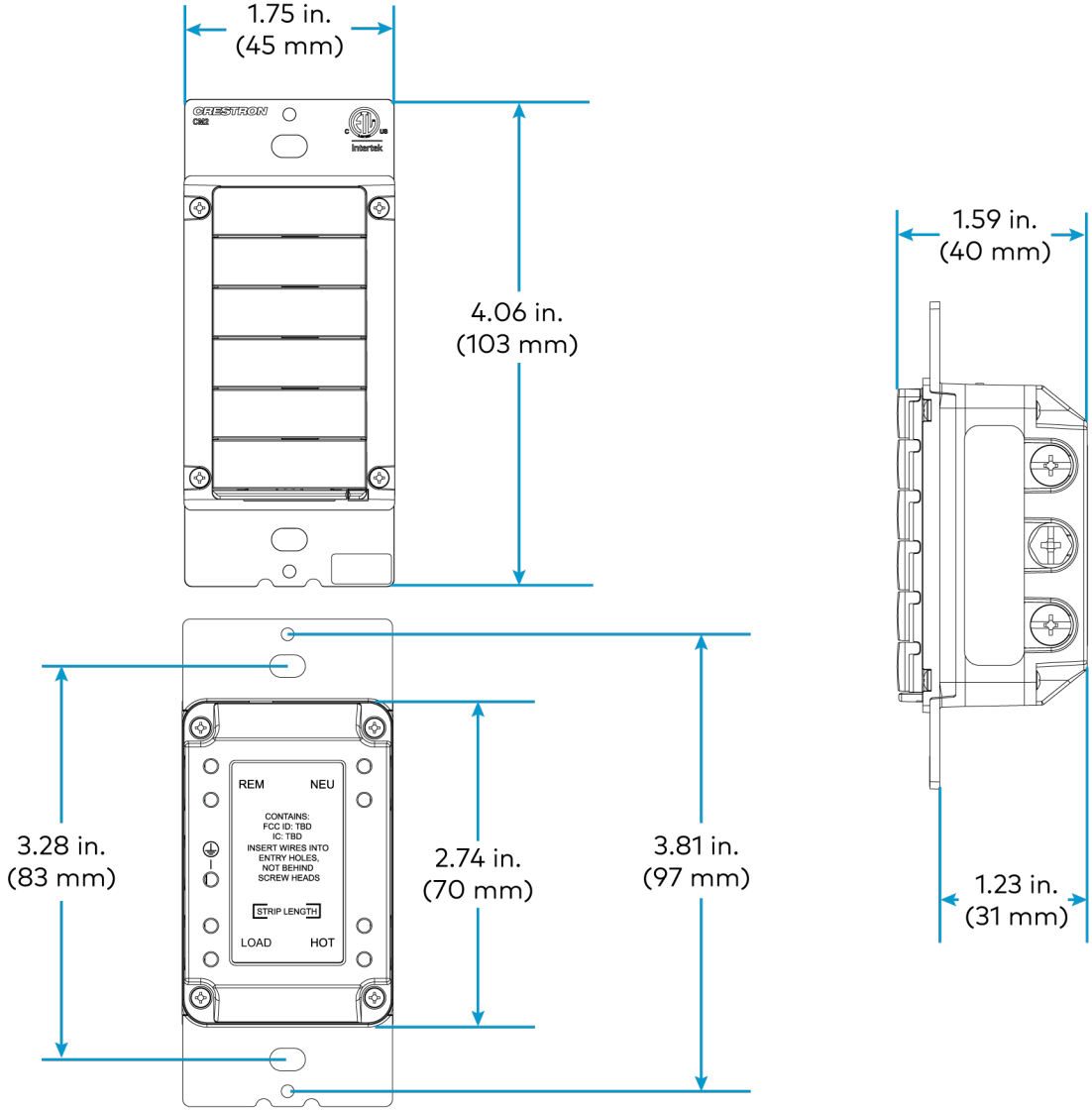

Rocker Model

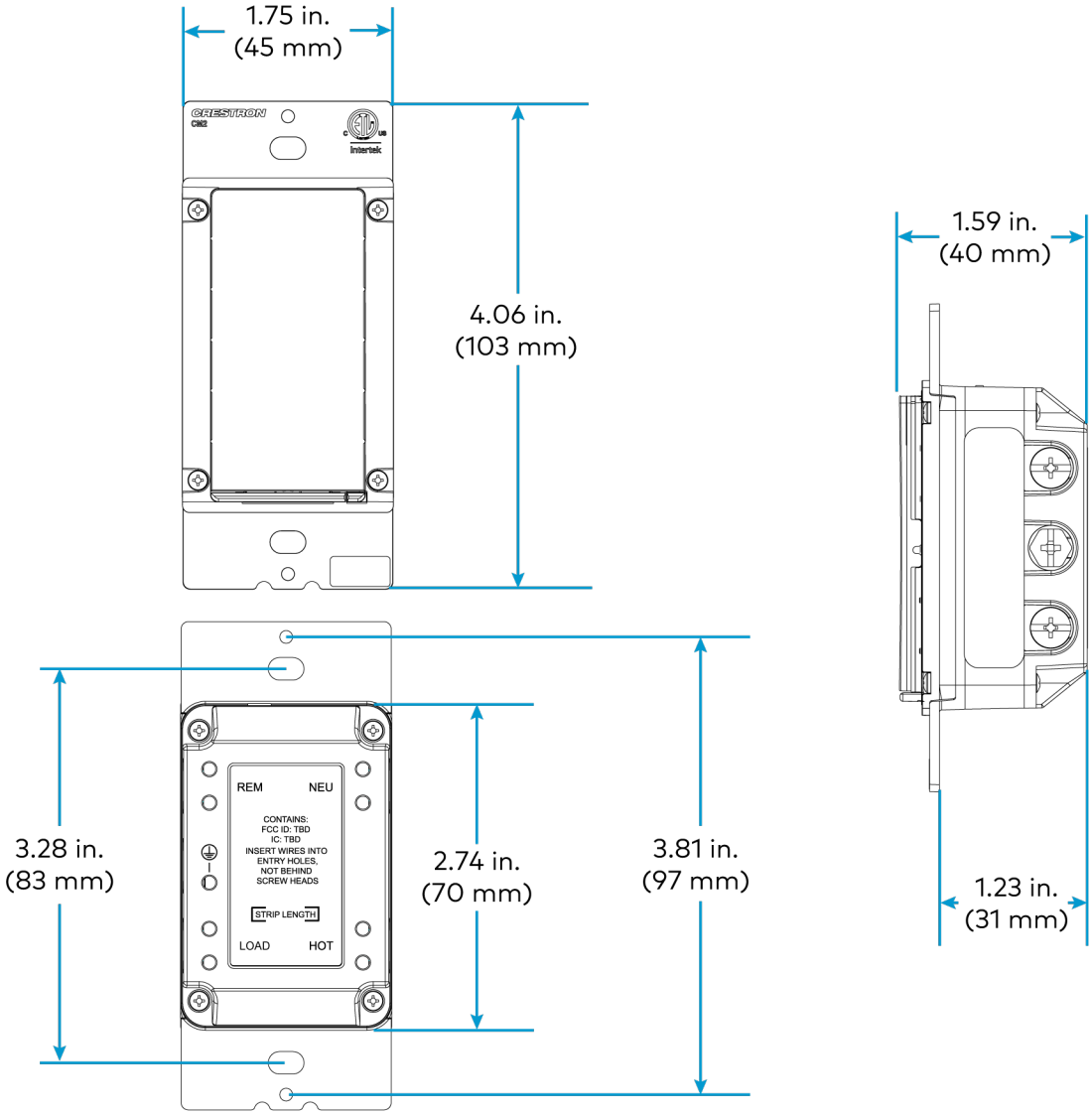

CM2-DIMUEX Specifications

Product specifications for the CM2-DIMUEX are provided below.

Product Specifications

Load Requirements

Incandescent, Tungsten Halogen, Magnetic Ballast, Electronic Ballasts, CFL, LED	500 W/VA @ 100VAC; 600 W/VA @ 120-240VAC; No minimum load with neutral
No Neutral Minimum Load[1]	5 W Incandescent; 2 Bulbs[2] LED
Motor	1/8 HP

Power Requirements

Line Power	100-240 VAC, 50/60 Hz
Overvoltage Category	III

Controls

Buttons	RKR models: Large rocker Full keypad models: 2 to 6 buttons programmable via control system; The bottom 4 buttons can be programmed to be side to side rockers.
Button Events	Programmable for Normal, Tap, Double-Tap, and Press and Hold
Button Caps	RKR models include one large rocker; Standard engraved full keypad models include 6 small buttons; ENGRAVED models include custom engraving on small, medium, or large button types in any available combination.RKR models are limited to large rockers.

LED Indicator

Feedback (-RKR)	(3) RGB backlit text regions; Full RGB backlit bargraph that can also function as 3 RGB indicator regions
Feedback (Full Keypad)	(6) RGB backlit text regions and 6 RGB indicator regions

Wireless

RF Transceiver	infiNET EX® 2-way RF, 2.4 GHz ISM Channels 11-26 (2400 to 2483.5 MHz); Default channel 15; IEEE 802.15.4 compliant

Range (typical)	150 ft (46 m) indoor, 250 ft (76 m) outdoor to nearest mesh network device (s); Subject to site-specific conditions and individual device capabilities
Gateway	Requires a Crestron Wireless Gateway (sold separately)

Connections

HOT	(1) 14-12 AWG, screw terminal, black, line power input
REM	(1) 14-12 AWG, screw terminal, blue, remote
LOAD	(1) 14-12 AWG, screw terminal, brass, load output
NEU	(1) 14-12 AWG, screw terminal, silver, neutral; Neutral wire connection is optional, but is recommended for best performance.
GND	(1) 14-12 AWG, screw terminal, green, earth

Environmental

Temperature	32° to 86°F (0 °to 30°C)
Humidity	10% to 95% RH (noncondensing)
Pollution Degree	2

Construction

Mounting	Mounts into any gang U.S. electrical box; 3.5 in. (89 mm) electrical box depth recommended; Derating required in multigang applications. Refer to the product manual for details.

Dimensions

Height	4.06 in. (103 mm)
Width	1.75 in. (45 mm)
Depth	1.59 in. (40 mm)

Compliance

Regulatory Model: M202311001

FCC Part 15 Class B, IC Class B, CE, Intertek® Listed for US and Canada

Notes:

1. The dimmer has five settable power modes to optimize no neutral performance: Normal, Low Power with Aux, Low Power without Aux, Lowest Power with Aux, and Lowest Power without Aux. The specified minimum loads are with the default Low Power with Aux no neutral power mode. No neutral calibration sets the maximum dim level possible with the connected load. The minimum load varies depending on power mode selection and maximum dim level desired.
2. No neutral performance with LED loads varies manufacturer to manufacturer. You may need to select a lower power mode and rerun the no neutral calibration. In some situations, a third-party load bypass (for example, Aeotec® Bypass ZW150-Z) may need to be installed at the load pursuant to the third-party manufacturer's specifications and instructions.

Dimension Drawings

Full Keypad Model

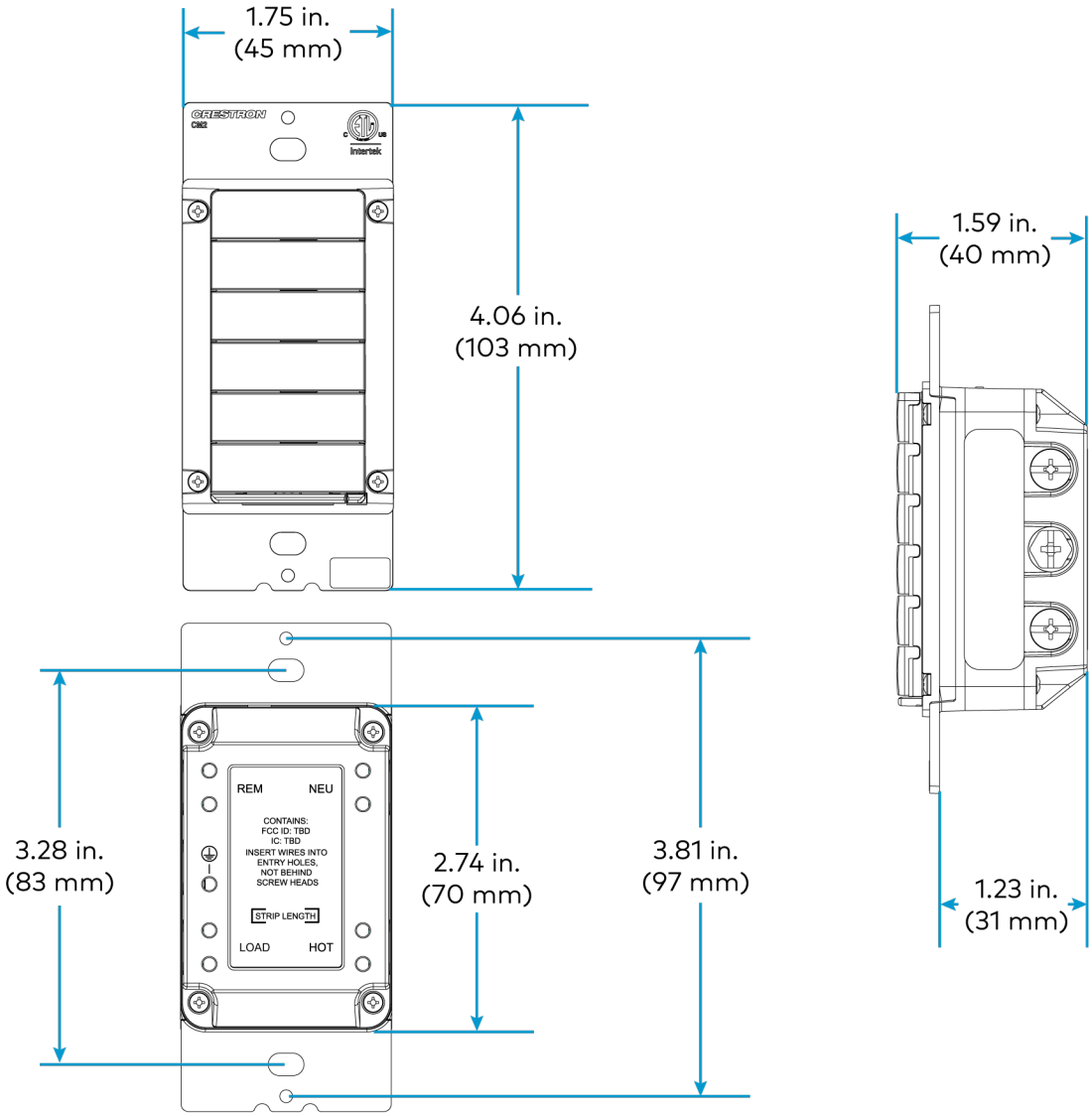
1.75 in.
(45 mm)
4.06 in.
(103 mm)
1.59 in.
(40 mm)
1.23 in.
(31 mm)
3.28 in.
(83 mm)
2.74 in.
(70 mm)
3.81 in.
(97 mm)
REM
NEU
CONTAINS:
FCC ID: TBD
IC: TBD
INSERT WIRES INTO
ENTRY HOLES,
NOT BEHIND
SCREW HEADS
STRIP LENGTH
LOAD
HOT

Rocker Model

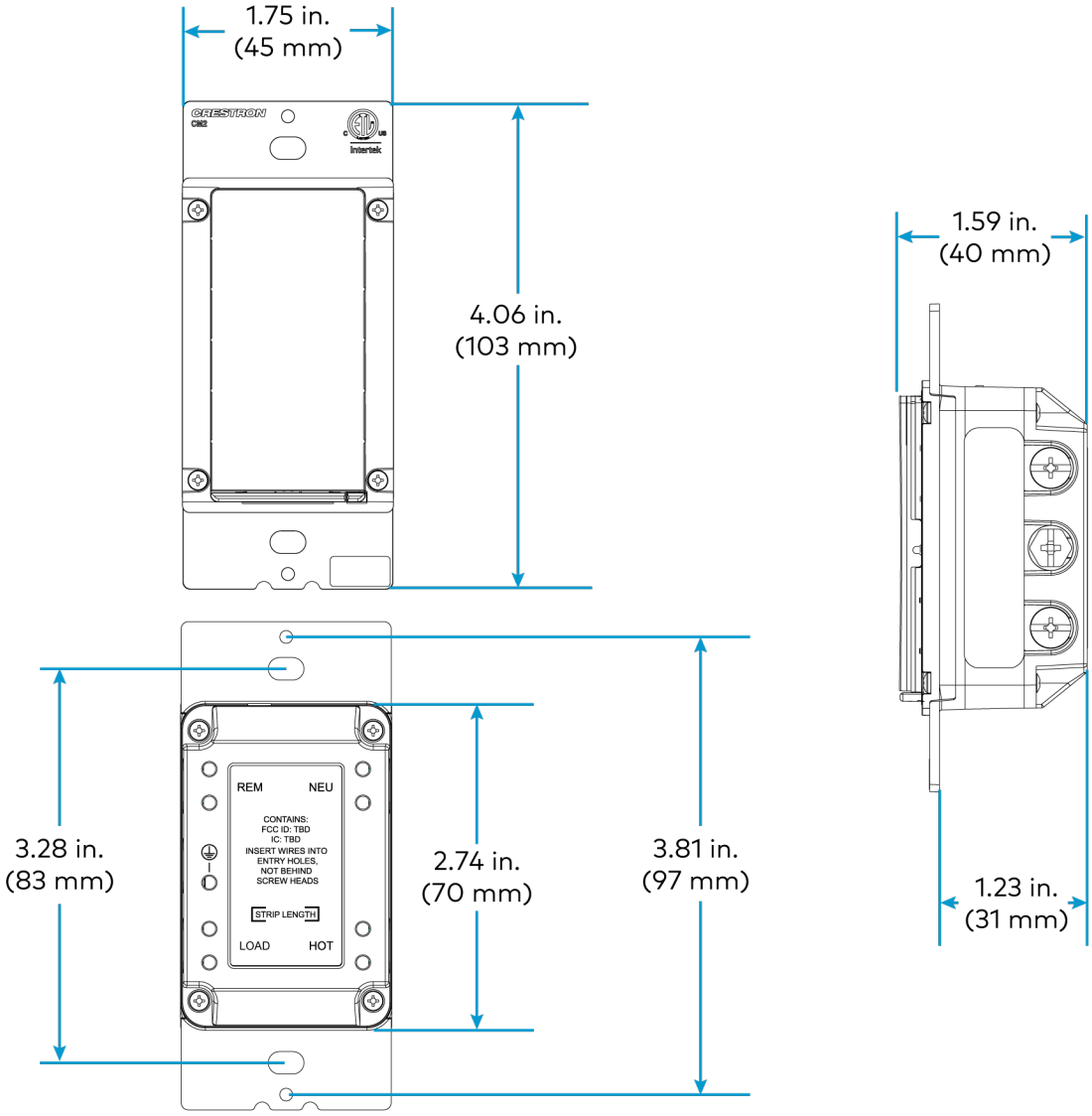

CM2-KPCN Specifications

Product specifications for the CM2-KPCN are provided below.

Product Specifications

Power Requirements

Cresnet Power Usage	2 W (83mA@24VDC)
Overvoltage Category	I

Controls

Buttons	2 to 6 buttons programmable via control system; The bottom 4 buttons can be programmed to be side to side rockers.
Button Events	Programmable for Normal, Tap, Double-Tap, and Press and Hold
Button Caps	Standard engraved models include 6 small buttons; ENGRAVED models include custom engraving on small, medium, or large button types in any available combination.

LED Indicator

Feedback	(6) RGB backlit text regions and 6 RGB indicator regions

Communications

Cresnet	Cresnet client mode

Connections

INPUT (1 2 G)	(1) 4-pin 3.5 mm detachable terminal block; (2) digital/analog input ports; (1) ground; (1) NC Digital Input: Rated for 0–24VDC, input impedance 200k Ω, logic threshold 1.24VDC; Analog Input: Rated for 0–10VDC, protected to 24VDC maximum, input impedance 200k Ω; Programmable 3.3V, 2k Ω pull-up resistor per input; Capable of reading a 10K NTC temperature sensor on each port
NET (24 Y Z G)	(2) 4 pin 3.5 mm detachable terminal blocks, paralleled; Cresnet secondary port with hardwire parallel pass through

Environmental

Temperature	32° to 86°F (0 °to 30°C)
Humidity	10% to 95% RH (noncondensing)
Pollution Degree	2

Construction

Mounting	Mounts into any gang U.S. electrical box; 3.5 in. (89 mm) electrical box depth recommended

Dimensions

Height	4.06 in. (103 mm)
Width	1.75 in. (45 mm)
Depth	.69 in. (18 mm)

Compliance

Regulatory Model: M202314003

FCC Part 15 Class B, IC Class B, CE, Intertek® Listed for US and Canada

Dimension Drawings

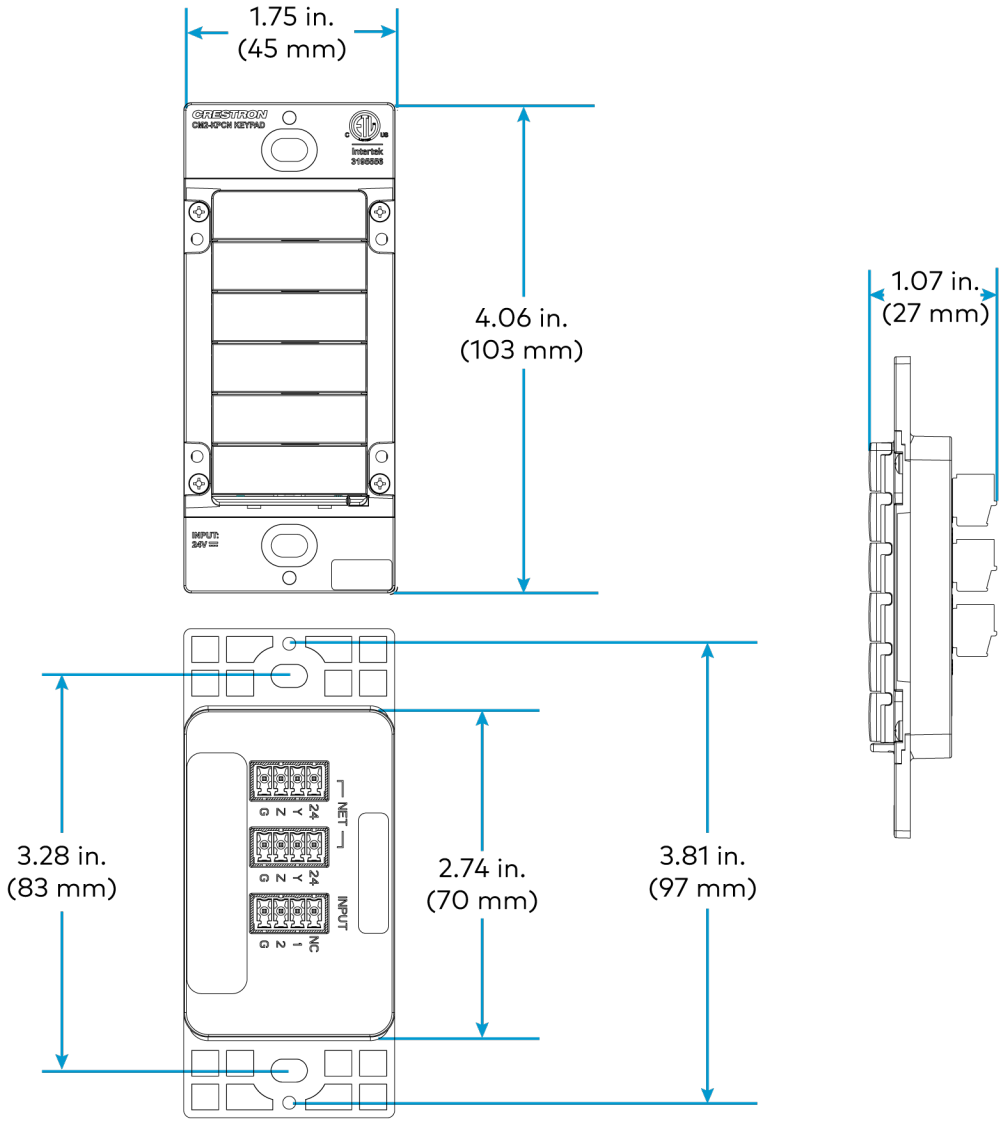

CM2-KPFCN Specifications

Product specifications for the CM2-KPFCN are provided below.

Product Specifications

Power Requirements

Cresnet Power Usage	2 W (83mA@24VDC)
Overvoltage Category	I

Controls

Buttons	2 to 6 buttons programmable via control system; The bottom 4 buttons can be programmed to be side to side rockers.
Button Events	Programmable for Normal, Tap, Double-Tap, and Press and Hold
Button Caps	

LED Indicator

Feedback	(6) RGB backlit text regions and 6 RGB indicator regions

Communications

Cresnet	Cresnet client mode

Connections

INPUT (1 2 G)	(1) 4-pin 3.5 mm detachable terminal block; (2) digital/analog input ports; (1) ground; (1) NC Digital Input: Rated for 0–24VDC, input impedance 200k Ω, logic threshold 1.24VDC; Analog Input: Rated for 0–10VDC, protected to 24VDC maximum, input impedance 200k Ω; Programmable 3.3V, 2k Ω pull-up resistor per input; Capable of reading a 10K NTC temperature sensor on each port
NET (24 Y Z G)	(2) 4 pin 3.5 mm detachable terminal blocks, paralleled; Cresnet secondary port with hardwire parallel pass through

Environmental

Temperature	32° to 86°F (0 °to 30°C)
Humidity	10% to 95% RH (noncondensing)
Pollution Degree	2

Construction

Dimensions

Compliance

Regulatory Model:

FCC Part 15 Class B, IC Class B, CE, Intertek® Listed for US and Canada

Dimension Drawings

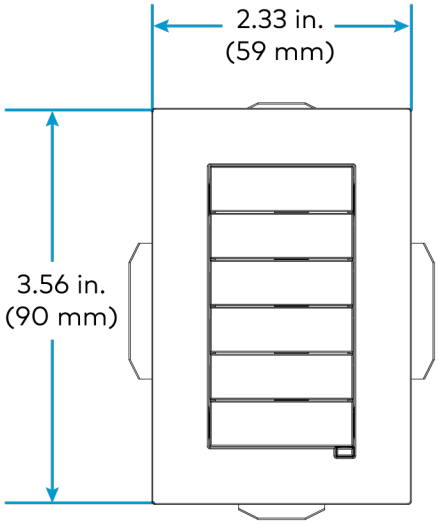

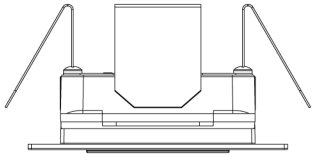

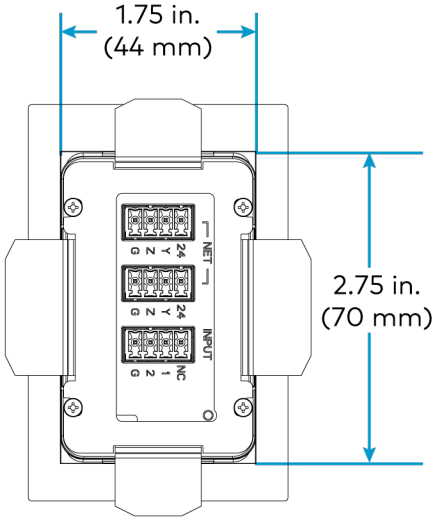

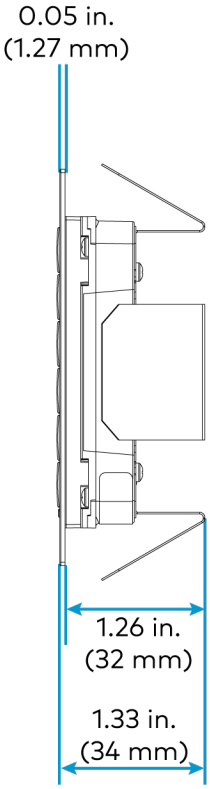

CM2-KPEX Specifications

Product specifications for the CM2-KPEX are provided below.

Product Specifications

Power Requirements

Line Power	100-240 VAC, 50/60 Hz
DC Power	60VDC, 30 mA; Requires a SolaHD® SDP™ 1-48-100T power supply (sold separately)
Overvoltage Category	III

Controls

Buttons	RKR models: Large rocker Full keypad models: 2 to 6 buttons programmable via control system; The bottom 4 buttons can be programmed to be side to side rockers. **NOTE:** The CM2-KPEX cannot be used to control a load directly. It must be used in conjunction with a CM2-DIMEX, CM2-DIMUEX, or CM2-SWEX.
Button Events	Programmable for Normal, Tap, Double-Tap, and Press and Hold
Button Caps	RKR models include one large rocker; Standard engraved full keypad models include 6 small buttons; ENGRAVED models include custom engraving on small, medium, or large button types in any available combination.RKR models are limited to large rockers.

LED Indicator

Feedback (-RKR)	(3) RGB backlit text regions; Full RGB backlit bargraph that can also function as 3 RGB indicator regions
Feedback (Full Keypad)	(6) RGB backlit text regions and 6 RGB indicator regions

Wireless

RF Transceiver	infiNET EX® 2-way RF, 2.4 GHz ISM Channels 11-26 (2400 to 2483.5 MHz); Default channel 15; IEEE 802.15.4 compliant
Range (typical)	150 ft (46 m) indoor, 250 ft (76 m) outdoor to nearest mesh network device (s); Subject to site-specific conditions and individual device capabilities
Gateway	Requires a Crestron Wireless Gateway (sold separately)

Connections

HOT	(1) 14-12 AWG, screw terminal, black, line power input
REM	(1) 14-12 AWG, screw terminal, blue, remote
NEU	(1) 14-12 AWG, screw terminal, silver, neutral; Neutral wire connection is required
GND	(1) 14-12 AWG, screw terminal, green, earth

Environmental

Temperature	32° to 86°F (0 °to 30°C)
Humidity	10% to 95% RH (noncondensing)
Pollution Degree	2

Construction

Mounting	Mounts into any gang U.S. electrical box; 3.5 in. (89 mm) electrical box depth recommended

Dimensions

Height	4.06 in. (103 mm)
Width	1.75 in. (45 mm)
Depth	1.59 in. (40 mm)

Compliance

Regulatory Model: M202311004

FCC Part 15 Class B, IC Class B, CE, Intertek® Listed for US and Canada

Dimension Drawings

Full Keypad Model

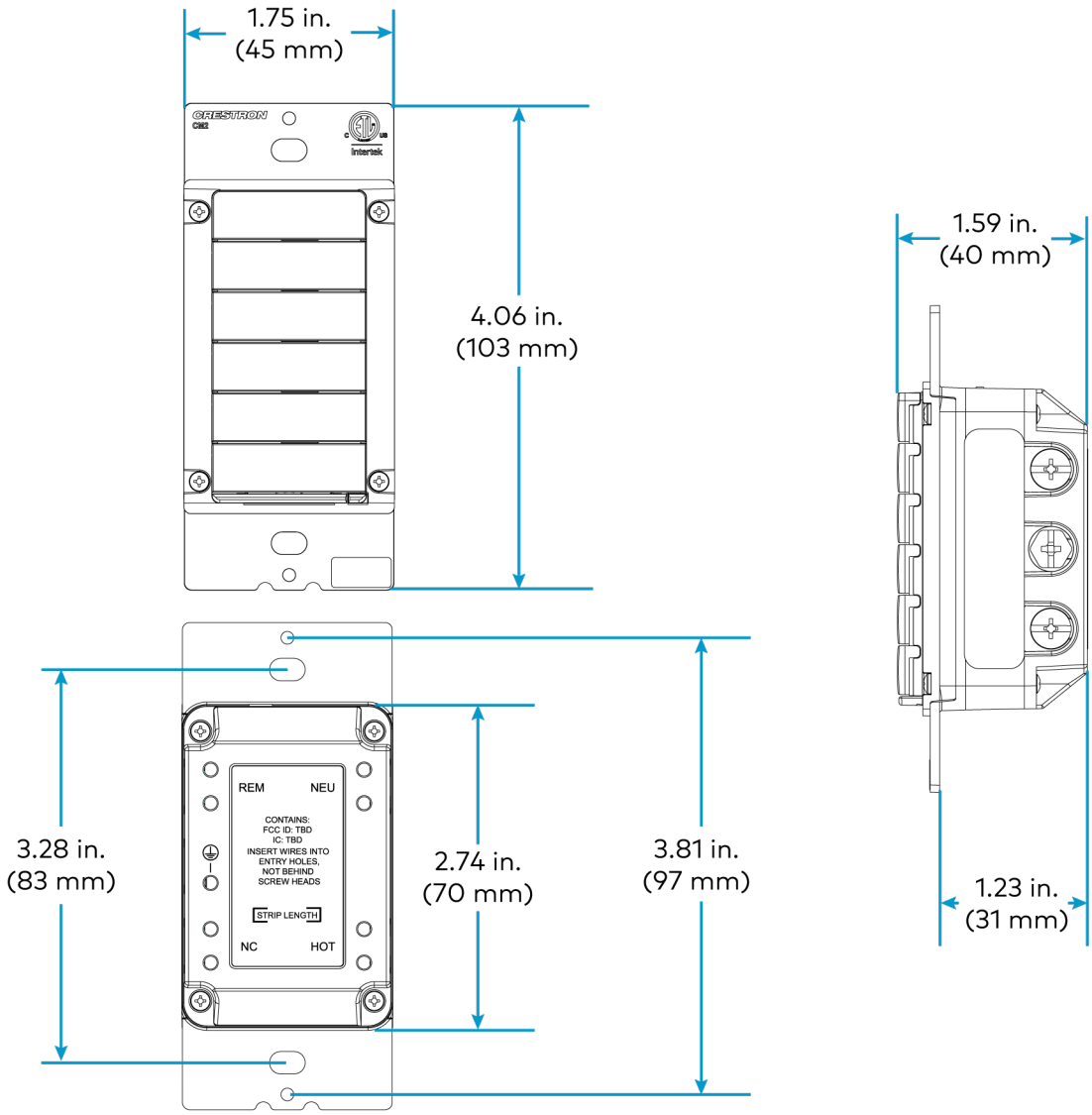
1.75 in.
(45 mm)
4.06 in.
(103 mm)
1.59 in.
(40 mm)
REM
NEU
CONTAINS:
FCC ID: TBD
IC: TBD
INSERT WIRES INTO
ENTRY HOLES,
NOT BEHIND
SCREW HEADS
STRIP LENGTH
NC
HOT
3.28 in.
(83 mm)
2.74 in.
(70 mm)
3.81 in.
(97 mm)
1.23 in.
(31 mm)

Rocker Model

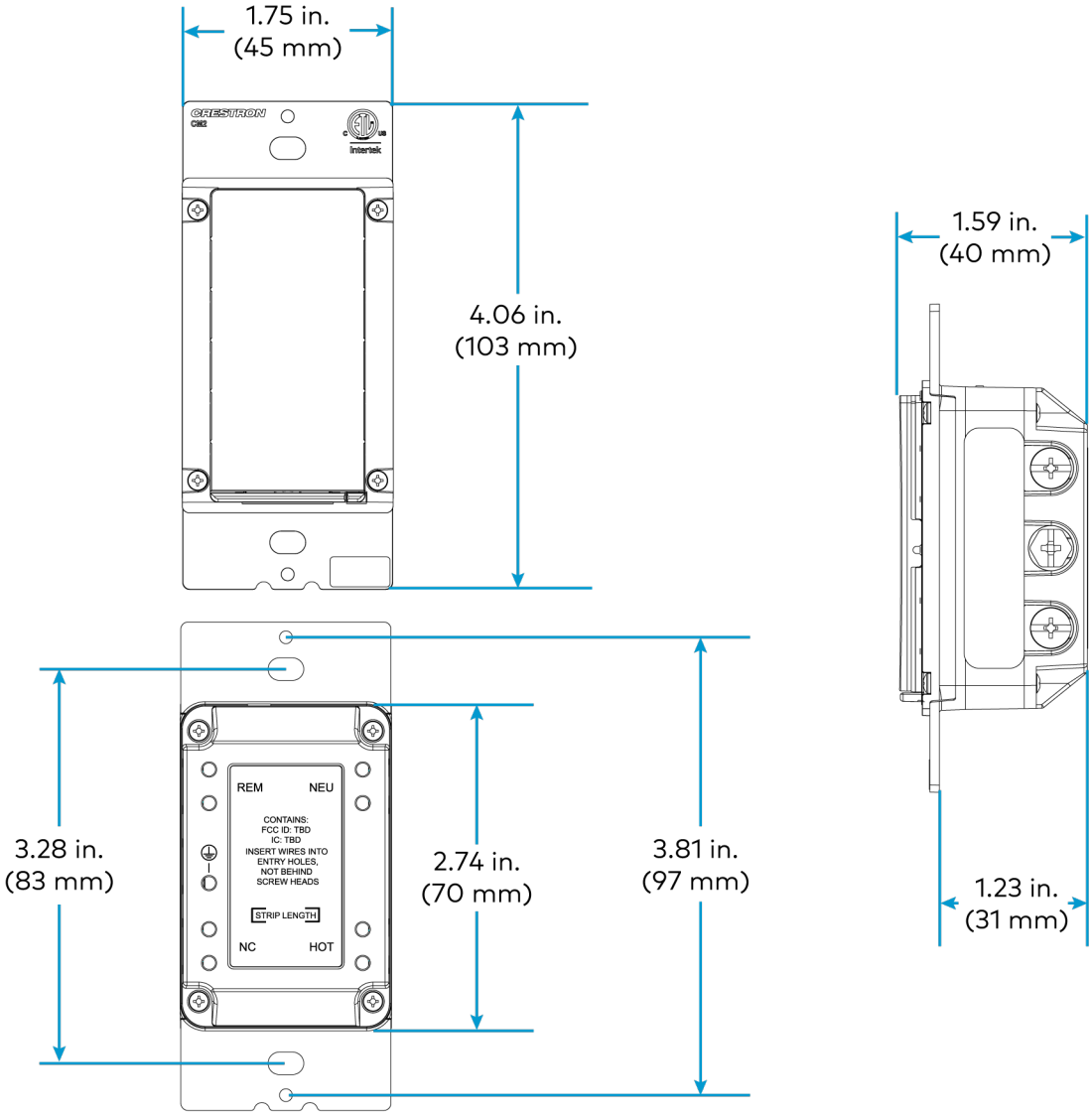

CM2-SWEX Specifications

Product specifications for the CM2-SWEX are provided below.

Product Specifications

Load Requirements

Incandescent, Tungsten Halogen, Magnetic Ballast	1200 W/VA maximum
Electronic Ballasts, CFL	1200 W/VA maximum
Motor	1/2 HP

Power Requirements

Line Power	100-240 VAC, 50/60 Hz
Overvoltage Category	III

Controls

Buttons	RKR models: Large rocker Full keypad models: 2 to 6 buttons programmable via control system; The bottom 4 buttons can be programmed to be side to side rockers.
Button Events	Programmable for Normal, Tap, Double-Tap, and Press and Hold
Button Caps	RKR models include one large rocker; Standard engraved full keypad models include 6 small buttons; ENGRAVED models include custom engraving on small, medium, or large button types in any available combination.RKR models are limited to large rockers.

LED Indicator

Feedback (-RKR)	(3) RGB backlit text regions; Full RGB backlit bargraph that can also function as 3 RGB indicator regions
Feedback (Full Keypad)	(6) RGB backlit text regions and 6 RGB indicator regions

Wireless

RF Transceiver	infiNET EX® 2-way RF, 2.4 GHz ISM Channels 11-26 (2400 to 2483.5 MHz); Default channel 15; IEEE 802.15.4 compliant
Range (typical)	150 ft (46 m) indoor, 250 ft (76 m) outdoor to nearest mesh network device (s); Subject to site-specific conditions and individual device capabilities

Gateway	Requires a Crestron Wireless Gateway (sold separately)

Connections

HOT	(1) 14-12 AWG, screw terminal, black, line power input
REM	(1) 14-12 AWG, screw terminal, blue, remote
LOAD	(1) 14-12 AWG, screw terminal, brass, load output
NEU	(1) 14-12 AWG, screw terminal, silver, neutral; Neutral wire connection is required
GND	(1) 14-12 AWG, screw terminal, green, earth

Environmental

Temperature	32° to 86°F (0 °to 30°C)
Humidity	10% to 95% RH (noncondensing)
Pollution Degree	2

Construction

Mounting	Mounts into any gang U.S. electrical box; 3.5 in. (89 mm) electrical box depth recommended; Derating required in multigang applications. Refer to the product manual for details.

Dimensions

Height	4.06 in. (103 mm)
Width	1.75 in. (45 mm)
Depth	1.59 in. (40 mm)

Compliance

Regulatory Model: M202314003

FCC Part 15 Class B, IC Class B, CE, Intertek® Listed for US and Canada

Dimension Drawings

Full Keypad Model

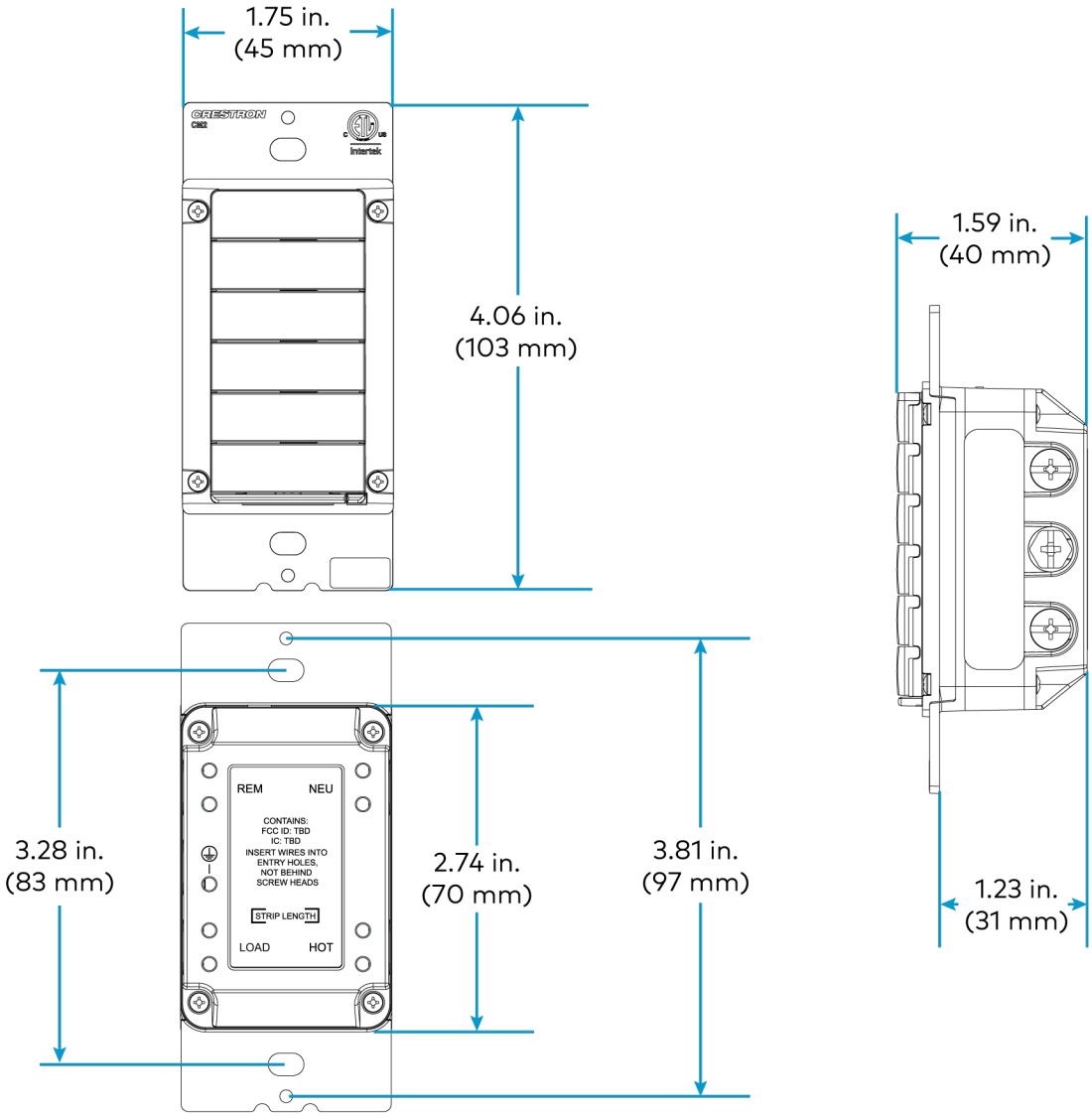
1.75 in.
(45 mm)
4.06 in.
(103 mm)
1.59 in.
(40 mm)
3.28 in.
(83 mm)
2.74 in.
(70 mm)
3.81 in.
(97 mm)
1.23 in.
(31 mm)
REM
NEU
CONTAINS:
FCC ID: TBD
IC: TBD
INSERT WIRES INTO
ENTRY HOLES,
NOT BEHIND
SCREW HEADS
STRIP LENGTH
LOAD
HOT

Rocker Model

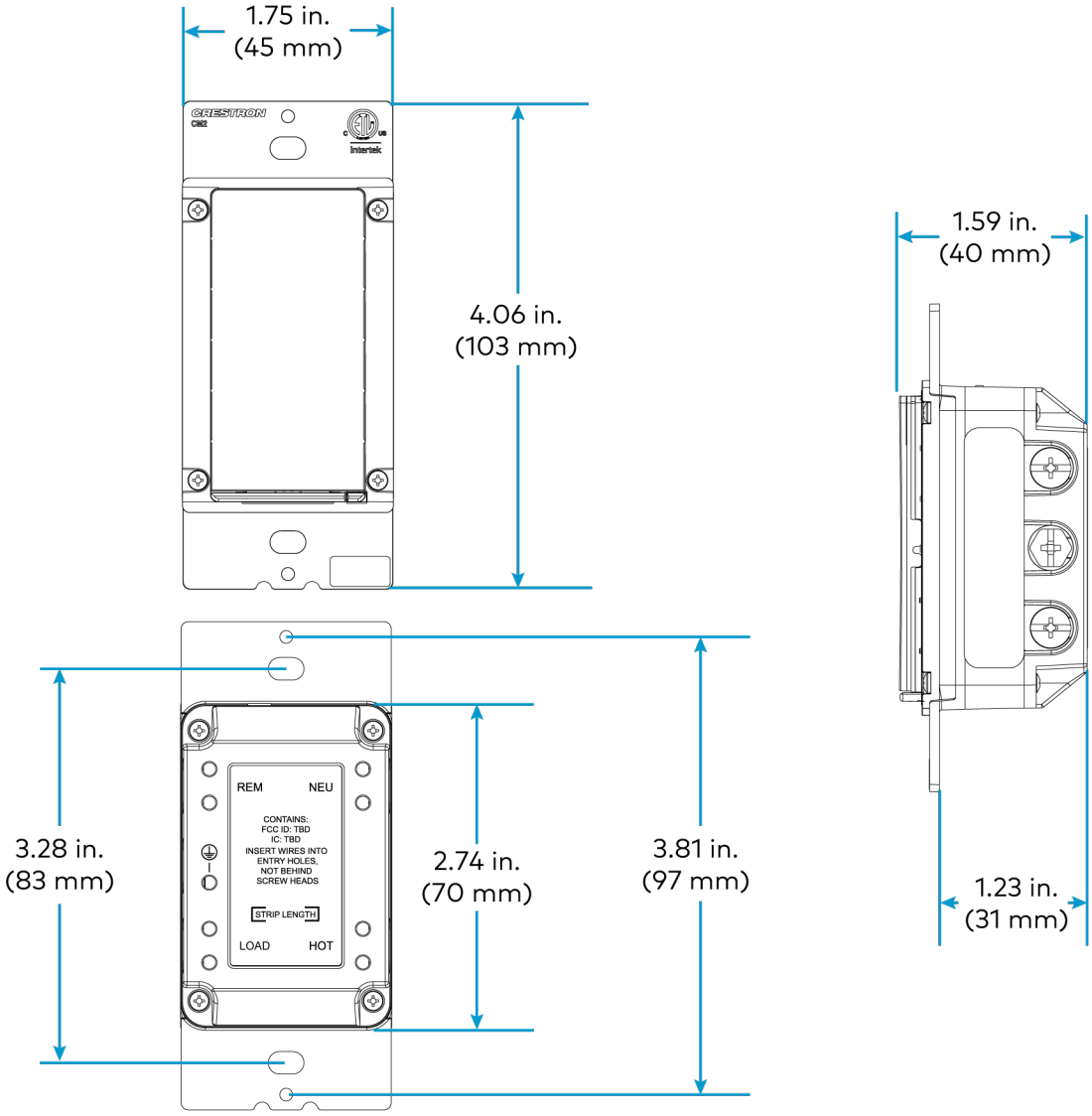

CM2-BTN Specifications

Product specifications for the CM2-BTN are provided below.

Product Specifications

Construction

Composition	Plastic; White, almond, gray, or black; Textured or smooth

Buttons

Positions (Non-RKR devices)	Non-RKR Cameo 2 devices feature six button positions. Any combination of small, medium, and large buttons can be used to fill the six positions. **NOTES:** • **-TOP** buttons must occupy the top position. • Small and medium buttons in the bottom four positions can also function as side to side rockers. • **-RKR** buttons are not compatible with non-RKR devices. Small (**-SM**): Occupies one position Medium (**-MD**): Occupies two positions Large (**-LG**): Occupies three positions
Positions (-RKR devices)	**-RKR** Cameo 2 devices only accept a single **-RKR** button.
Colors	Custom engraved and blank buttons are available in the following finishes to match Cameo 2 devices: • W-S: White Smooth • W-T: White Textured • B-S: Black Smooth • B-T: Black Textured • A-S: Almond Smooth • A-T: Almond Textured • G-S: Gray Smooth • G-T: Gray Textured

Engraving Options

Buttons are available engraved or blank:

- Engraved: Buttons ordered with the **ENGRAVED** option are custom engraved prior to shipment.
- Blank: Buttons can be ordered with the **BLANK** option and do not include custom engraving. **BLANK** buttons can be used as is or can be custom engraved by a third-party engraver.

CM2-FP Specifications

Product specifications for the CM2-FP are provided below.

Specifications

Construction

Composition	Plastic; White, almond, gray, or black; Textured or smooth

Dimensions

Accommodates standard decorator style devices.

Height	4.69 in (119 mm)
Width	2.94 in (75 mm) -G1; 4.75 in (121 mm) -G2; 6.56 in (167 mm) -G3; 8.37 in (213 mm) -G4
Depth	0.29 in (7 mm)

Dimension Drawings

CM2-FP-G1

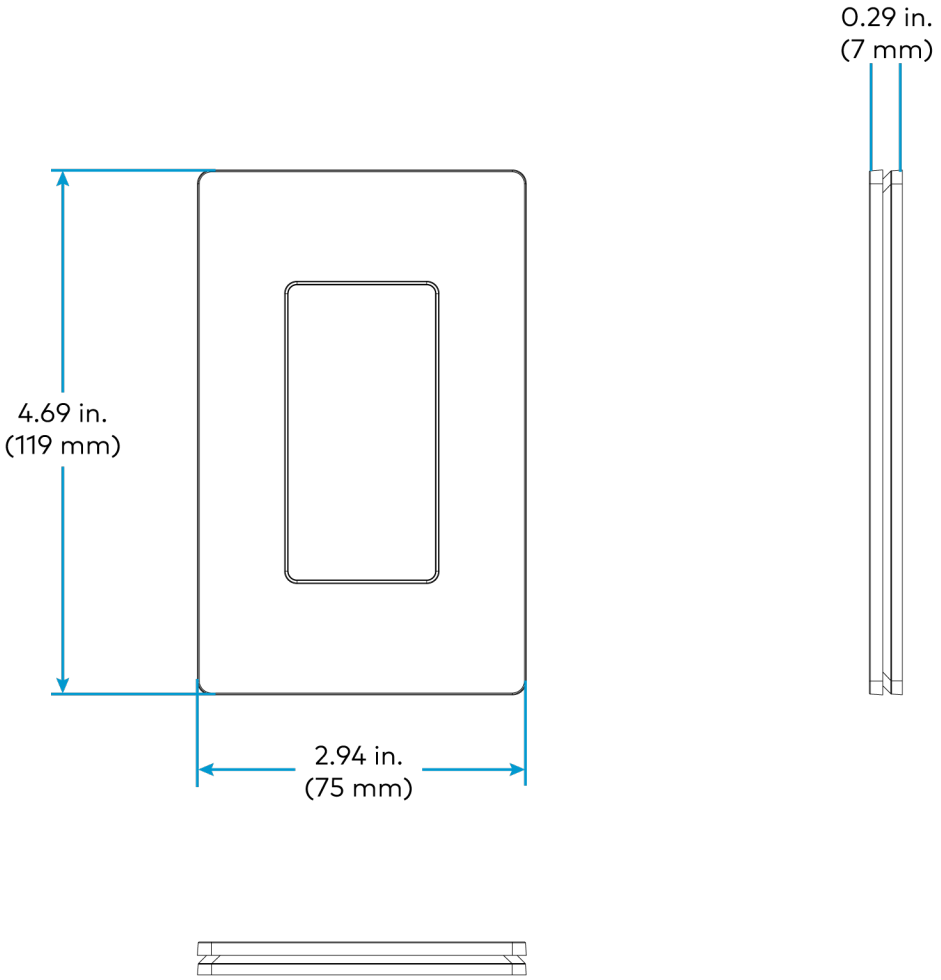

CM2-FP-G2

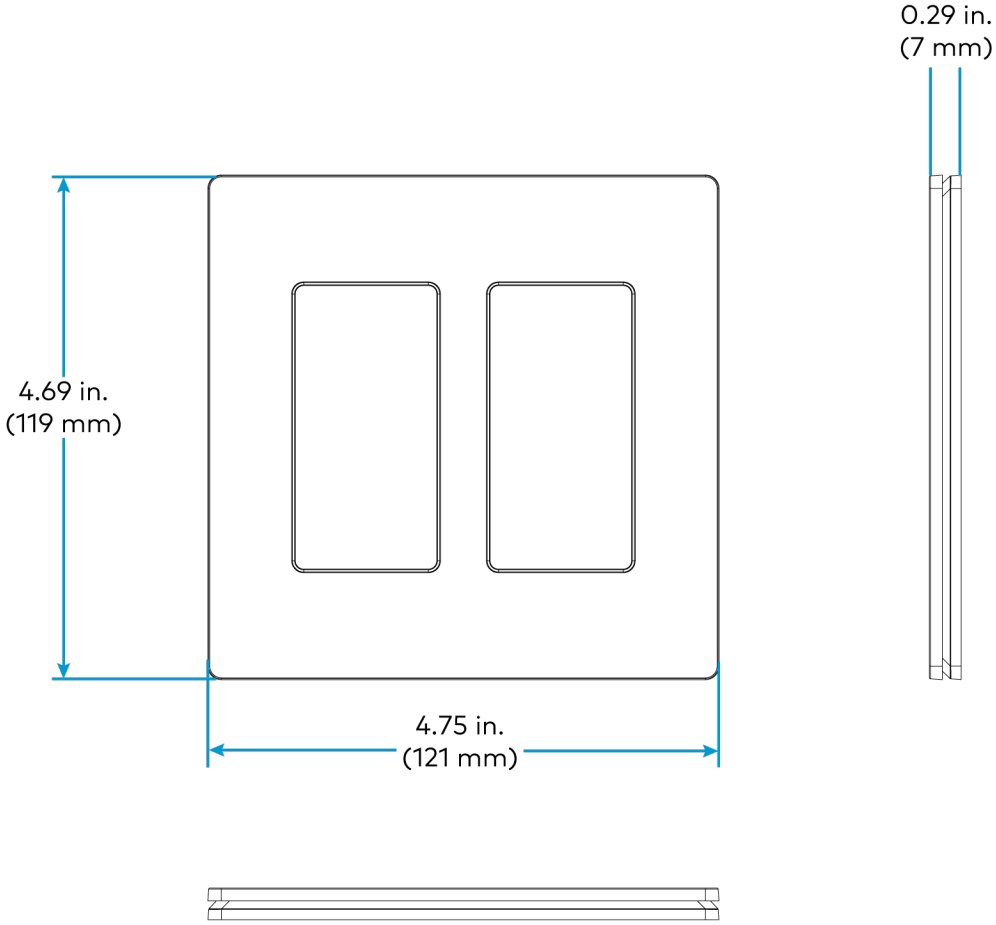

CM2-FP-G3

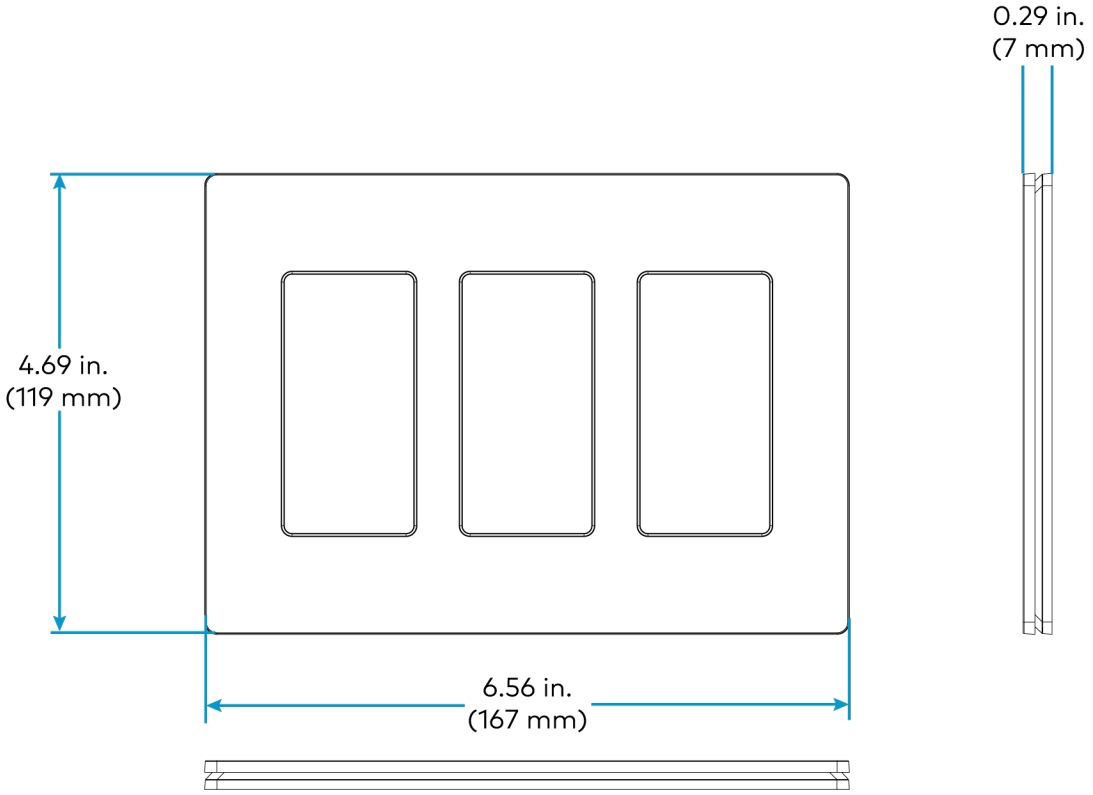

CM2-FP-G4

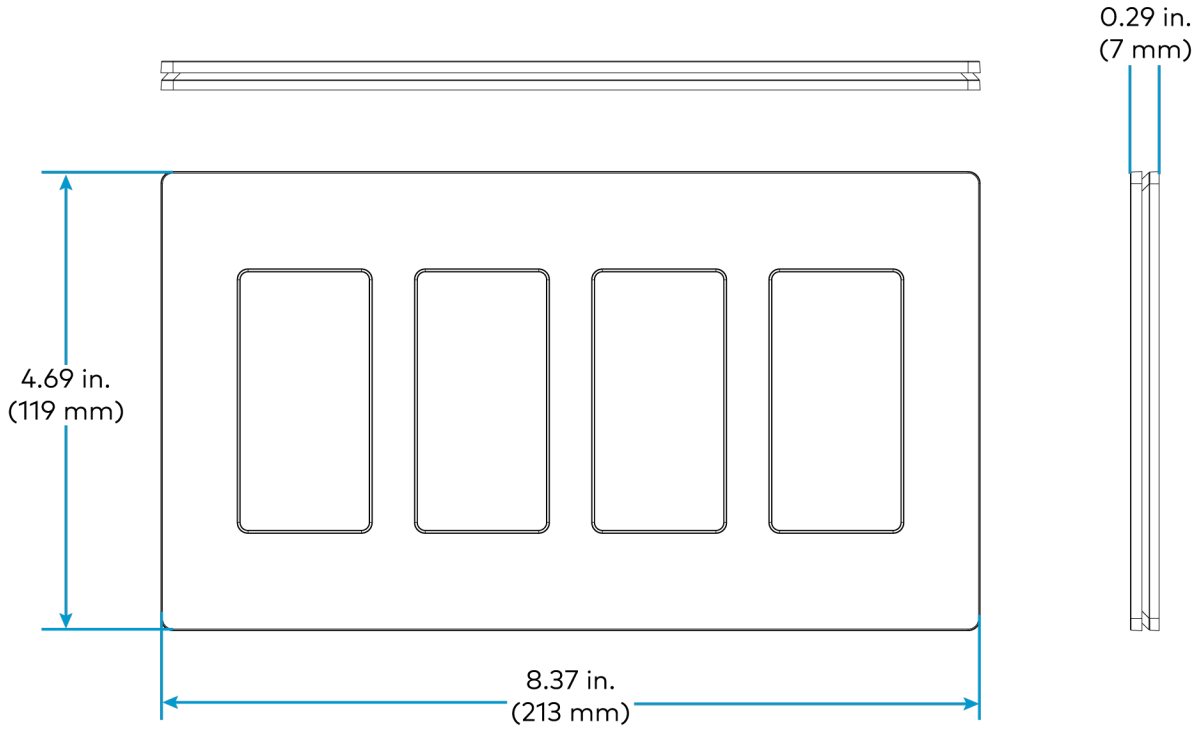

Installation

This section provides the following information:

- In the Box
- Installing Single Gang Cameo 2 Keypads
- Installing the CM2-KPCN
- Installing the CM2-KPFCN
- Wiring
- CM2-BTN Installation
- Air Gap Cover Installation

In the Box

Keypads

CM2-AUX, CM2-DIMEX, CM2-DIMUEX, CM2-KPEX, CM2-SWEX

Qty.	Description
1	CM2-AUX, Cameo® 2 In-Wall Multiway Remote CM2-DIMEX, Cameo® 2 In-Wall Forward-Phase Dimmer with infiNET EX® Wireless Communication, 100-240VAC CM2-DIMUEX, Cameo® 2 In-Wall Universal Phase Dimmer with infiNET EX® Wireless Communication, 100-240VAC CM2-KPEX, Cameo® 2 In-Wall Keypad with infiNET EX® Wireless Communication, 100-240VAC CM2-SWEX, Cameo® 2 In-Wall Switch with infiNET EX® Wireless Communication, 100-240VAC

	Additional Items
2	Screw, 06-32 x 1 in. Truss, Combo (2054883)

CM2-KPCN

Qty.	Description
1	CM2-KPCN, Cameo® 2 Keypad with Cresnet® Communications

	Additional Items
2	Screw, 06-32 x 1 in. Truss, Combo (2054883)
3	Connector, 4-pin (2003576)

CM2-KPFCN

Qty.	Description
1	CM2-KPFCN, Cameo® 2 Flush Keypad with Cresnet® Communications

	Additional Items
4	Screw, 02-56 x 9/16 in. Phillips (2054883)
1	Metal Flush Mount Bracket (2063680)
1	Flush Faceplate
3	Connector, 4-pin (2003576)

Installing Single Gang Cameo 2 Keypads

This section contains single gang installation instructions for the following devices:

- CM2-AUX
- CM2-DIMEX
- CM2-DIMUEX
- CM2-KPEX
- CM2-SWEX
- CM2-DIM2EX

To install the Cameo 2 device, follow the steps below.

> **NOTE:** To wire the device, refer to Wiring on page 81.

1. Turn power off at the circuit breaker.

   > **WARNING:** If the device is used with an CM2-AUX or CM2-KPEX, power may need to be turned off at multiple breakers.

2. Insert the keypad into the electrical box. Once fully inserted, secure the device to the electrical box using two #06-32 x 1 in. combo head mounting screws (2054883) by hand. Avoid using the screws to compress wiring in an overcrowded backbox. Ensure the device is level and in the proper orientation with text facing up.

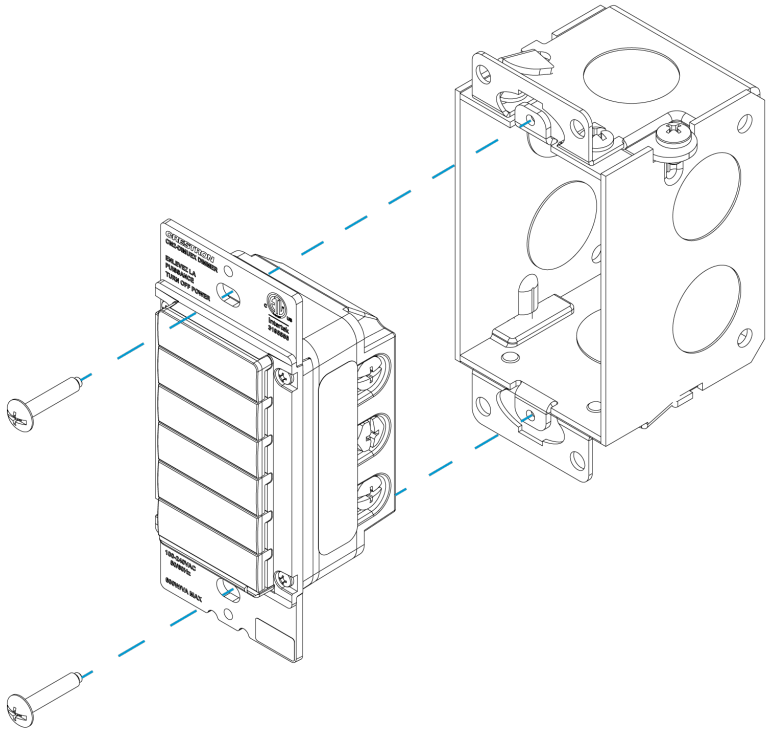

3. Attach the rear of the faceplate to the device using the #06-32 x 1/4 in. flat head Philips mounting screws (2007211) included with the Cameo 2 faceplate.

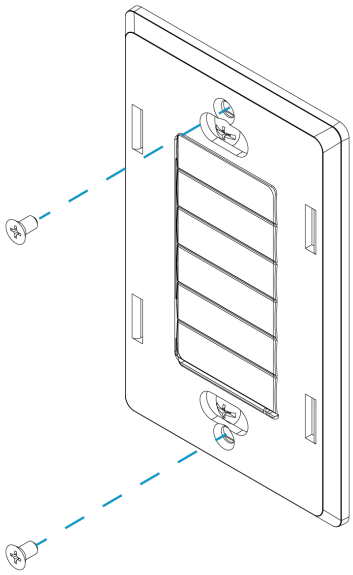

4. Snap the faceplate onto the device.

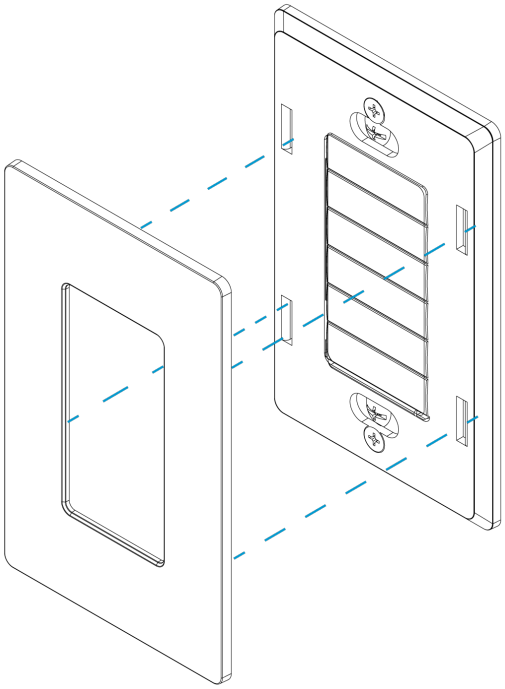

5. Test each button to make sure they actuate without sticking.
6. Restore power at the circuit breaker.

Installing the CM2-KPCN

To install the CM2-KPCN, follow the steps below.

1. Wire the CM2-KPCN as described in Wiring on page 81.
2. Loosely secure the CM2-KPCN to the electrical box using two #06-32 x 1 in. combo head mounting screws (2054883). Ensure the device is level and in the proper orientation with text facing up.

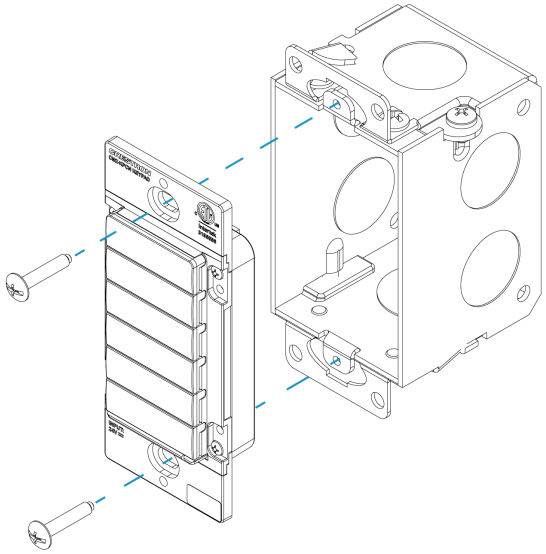

3. Attach the rear of the faceplate to the device using the #06-32 x 1/4 in flat head Philips mounting screws (2007211) included with the Cameo 2 faceplate.

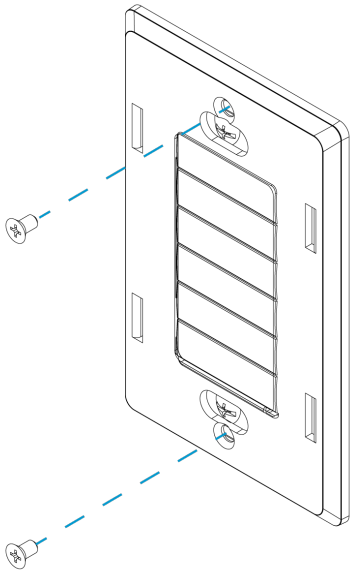

4. Fully tighten the two #06-32 x 1 in. combo head mounting screws to secure the device to the electrical box.

> **CAUTION:** Do not over-tighten the screws when attaching the device to the electrical box. Damage to the unit and undesired functionality may occur.

5. Snap the faceplate onto the device.

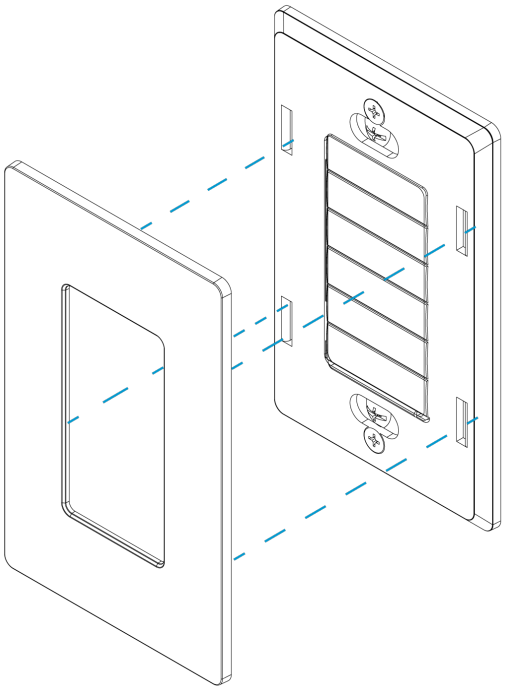

6. Test each button to make sure that they actuate without sticking.

Installing the CM2-KPFCN

To install the CM2-KPFCN, follow the steps below.

Drywall

The CM2-KPFCN can be mounted directly into dry wall. The MMK-CM2-KPFCN (sold separately) can be used to compensate for imperfections in drywall cutouts

Mounting Directly into Drywall

To mount the CM2-KPFCN directly into drywall, follow the instructions below.

1. Use the supplied template as a guide to cut the mounting hole for the CM2-KPFCN. Ensure that the template is level and properly located on the wall.
2. Wire the CM2-KPFCN as described in Wiring on page 81.
3. Insert the CM2-KPFCN into the mounting hole. The integrated springs on the metal mounting bracket will hold the keypad in place.

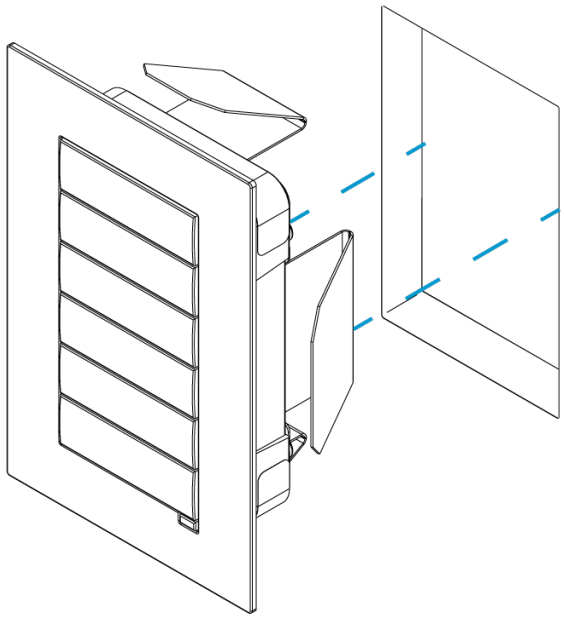

4. Verify that the CM2-KPFCN is level.

The metal mounting bracket can be adjusted to ensure the keypad is level. Loosen the Philips screws to adjust the bracket. Tighten the screws before reinserting the CM2-KPFCN.

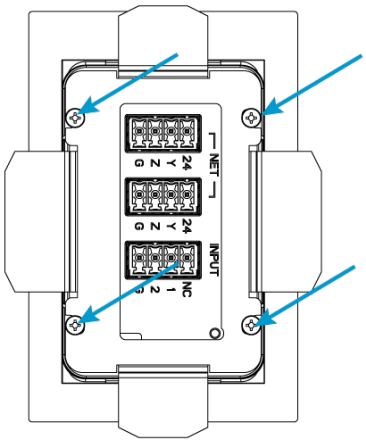

Mounting into Drywall with the MMK-CM2-KPFCN

To mount the CM2-KPFCN into drywall with the MMK-CM2-KPFCN, follow the instructions below.

1. Use the backside of the MMK-CM2-KPFCN or the template shipped with the CM2-KPFCN as a guide to cut the mounting hole. Ensure that the MMK-CM2-KPFCN or template is level and properly located on the wall.
2. Apply a thin later of drywall compound onto the wall, then insert the MMK-CM2-KPFCN into the mounting hole.

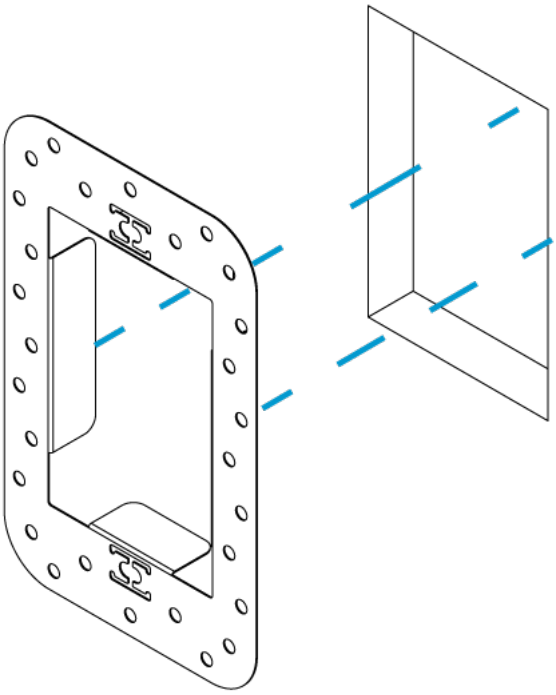

3. Verify that the MMK-CM2-KPFCN is level.

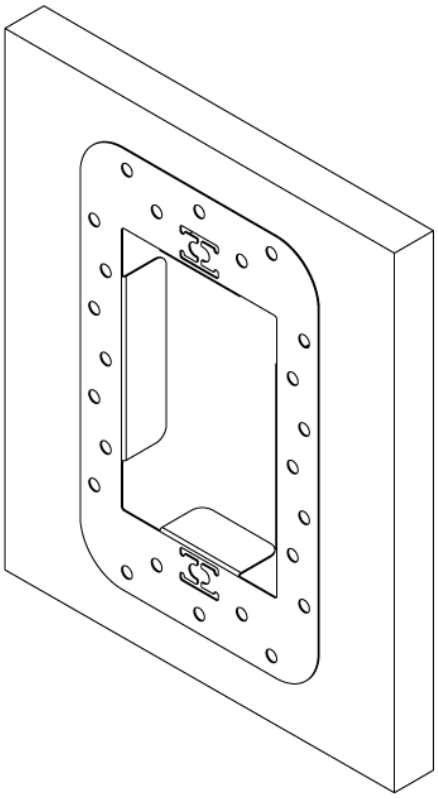

4. Apply drywall compound as needed to level the drywall surface. Feathering further out will yield a better finish. Wait for it to dry. Perform multiple coats with a light sand between coats for a better finish prior to painting.
5. Wire the CM2-KPFCN as described in Wiring on page 81.
6. Insert the CM2-KPFCN into the MMK-CM2-KPFCN. The integrated springs on the metal mounting bracket will hold the keypad in place.

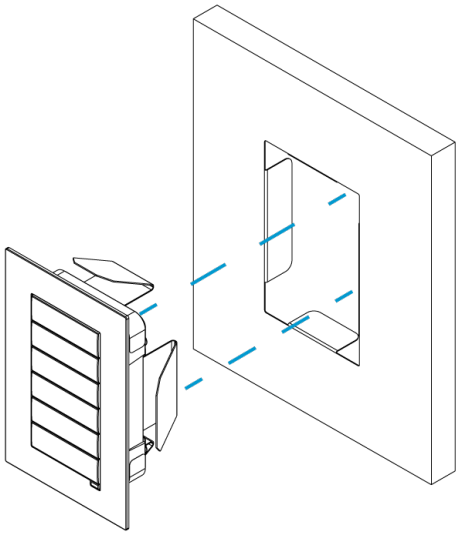

7. Verify that the CM2-KPFCN is level.

The metal mounting bracket can be adjusted to ensure the keypad is level. Loosen the Philips screws to adjust the bracket. Tighten the screws before reinserting the CM2-KPFCN.

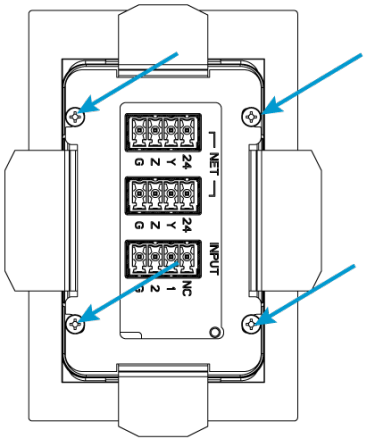

Backbox

The CM2-KPFCN can be mounted directly into a standard backbox. The MMK-CM2-KPFCN (sold separately) can be used, allowing the excess area around the backbox to be filled, sanded, and painted.

Mounting Directly into Backbox

To mount the CM2-KPFCN directly into a standard backbox, follow the instructions below.

1. Wire the CM2-KPFCN as described in Wiring on page 81.
2. Insert the CM2-KPFCN into the backbox. The integrated springs on the metal mounting bracket will hold the keypad in place.

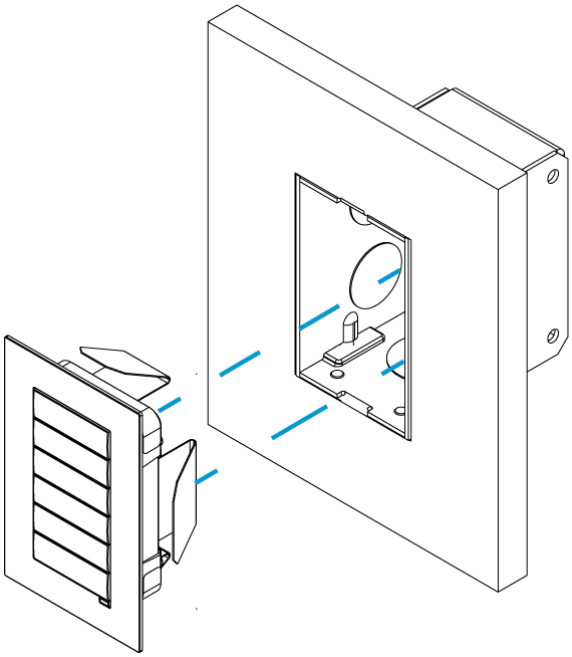

3. Verify that the CM2-KPFCN is level.

The metal mounting bracket can be adjusted to ensure the keypad is level. Loosen the Philips screws to adjust the bracket. Tighten the screws before reinserting the CM2-KPFCN.

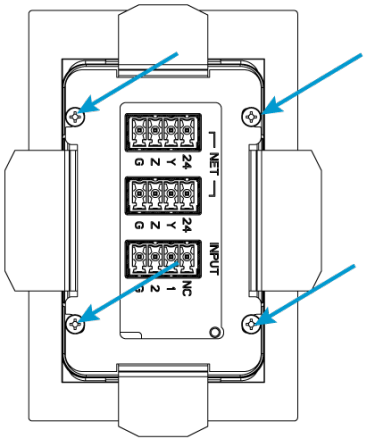

Mounting into Backbox with the MMK-CM2-KPFCN

To mount the CM2-KPFCN into a backbox with the MMK-CM2-KPFCN, follow the instructions below.

1. Apply a thin later of drywall compound onto the wall around the backbox.
2. Insert the MMK-CM2-KPFCN into the backbox opening.

3. Verify that the MMK-CM2-KPFCN is level.

> **TIP:** If the backbox is sufficiently recessed from the surface of the wall, use two 3/4 in. combo screws (included with the MMK-CM2-KPFCN) to secure the MMK-CM2-KPFCN to the backbox. Tighten them until the screw heads sit below the MMK-CM2-KPFCN front surface. Do not overtighten.
>
> 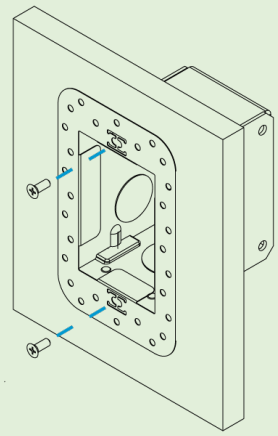

4. Apply drywall compound as needed to level the drywall surface. Feathering further out will yield a better finish. Wait for it to dry. Perform multiple coats with a light sand between coats for a better finish prior to painting.
5. When dry, wire the CM2-KPFCN as described in Wiring on page 81.
6. Insert the CM2-KPFCN into the MMK-CM2-KPFCN. The integrated springs on the metal mounting bracket will hold the keypad in place.
7. Verify that the CM2-KPFCN is level.

The metal mounting bracket can be adjusted to ensure the keypad is level. Loosen the Philips screws to adjust the bracket. Tighten the screws before reinserting the CM2-KPFCN.

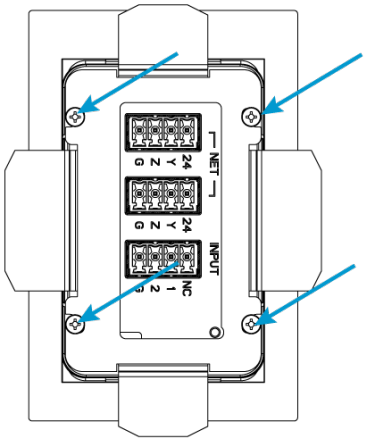

Masonry

The CM2-KPFCN can be mounted into masonry with the BB-CM2-KPFCN (sold separately). Follow the instructions below.

1. Run Cresnet wire to the mounting location for the BB-CM2-KPFCN.
2. Fix the BB-CM2-KPFCN into the wall using suitable mounting hardware (not included). Use the integrated level to verify that the BB-CM2-KPFCN is level.

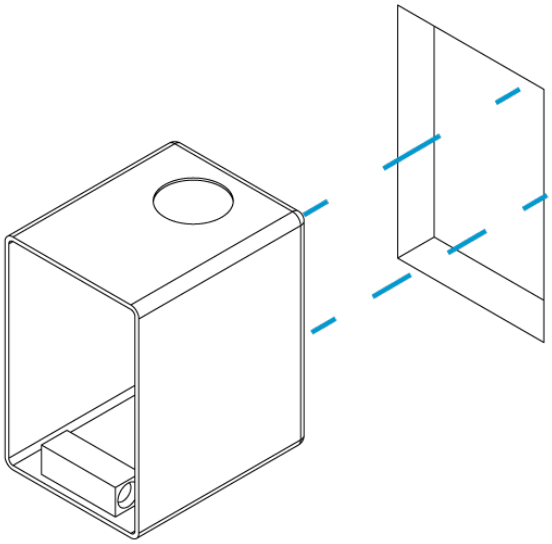

3. Remove the integrated level.
4. Wire the CM2-KPFCN as described in Wiring on page 81.
5. Insert the CM2-KPFCN into the MMK-CM2-KPFCN. The integrated springs on the metal mounting bracket will hold the keypad in place.

The metal mounting bracket can be adjusted to ensure the keypad is level. Loosen the Philips screws to adjust the bracket. Tighten the screws before reinserting the CM2-KPFCN.

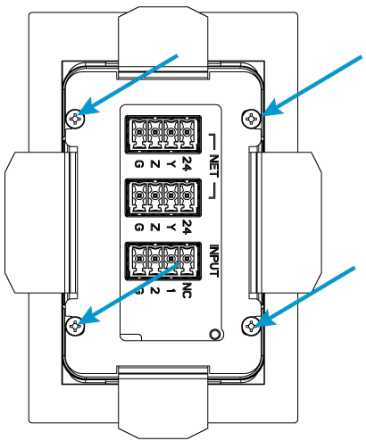

Wiring

Make connections to the line powered and 24VDC devices.

Line Powered Devices

To wire line powered Cameo 2 devices, follow the instructions below.

> **NOTE:** To install the device, refer to In the Box on page 68.

1. Turn the power off at the circuit breaker.

   > **WARNING:** If the device is used with an CM2-AUX or CM2-KPEX, power may need to be turned off at multiple breakers.

2. Wire the device as shown in the following diagrams. In multi-gang installations, daisy-chain Hot and Neutral wires with other Cameo 2 devices to eliminate excess wiring.
3. Fold the wires into the electrical box. Avoid pinched wires.

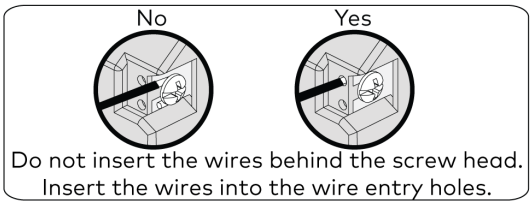

CM2-DIMEX, CM2-DIMUEX, and CM2-SWEX Wiring

> **NOTE:** Neutral is not required for the CM2-DIMEX or CM2-DIMUEX, but it should be used if it is available.

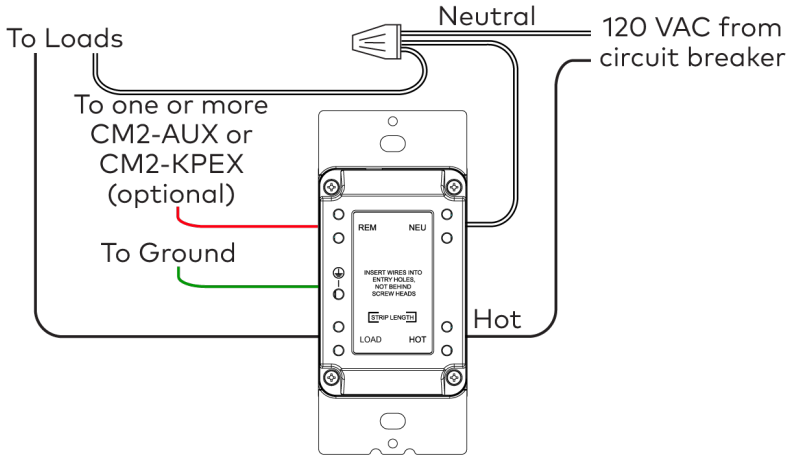

CM2-KPEX Wiring

> **NOTE:** Neutral is not required at the CM2-DIMEX or CM2-DIMUEX, but it should be used if it is available.

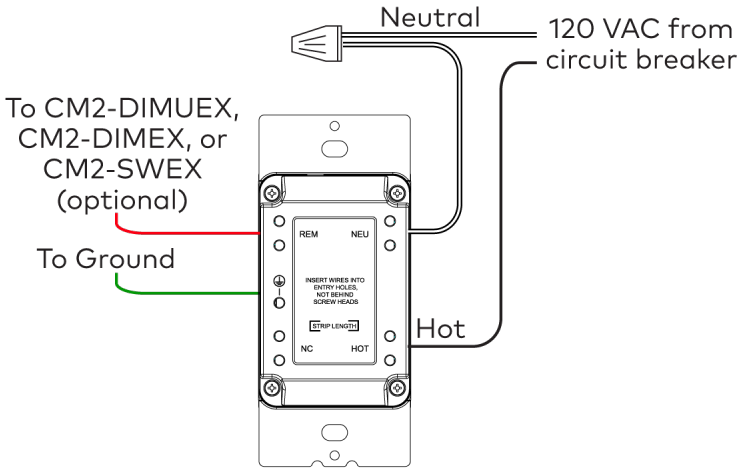

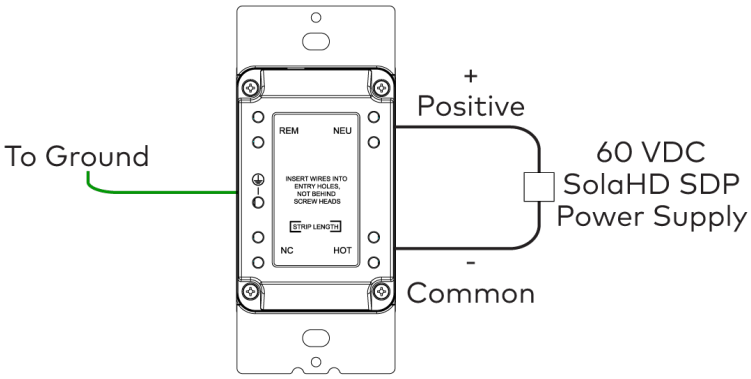

WARNING: Do not use the REM terminal when the CM2-KPEX is powered by 60 VDC.

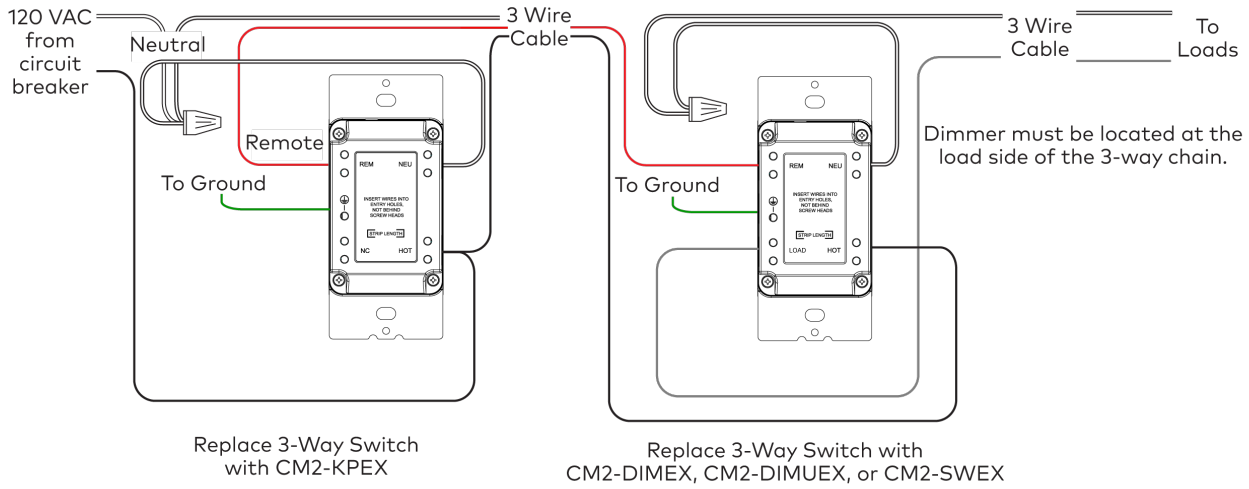

CM2-AUX Wiring

> **NOTE:** Neutral is not required at the CM2-DIMEX or CM2-DIMUEX, but it should be used if it is available.

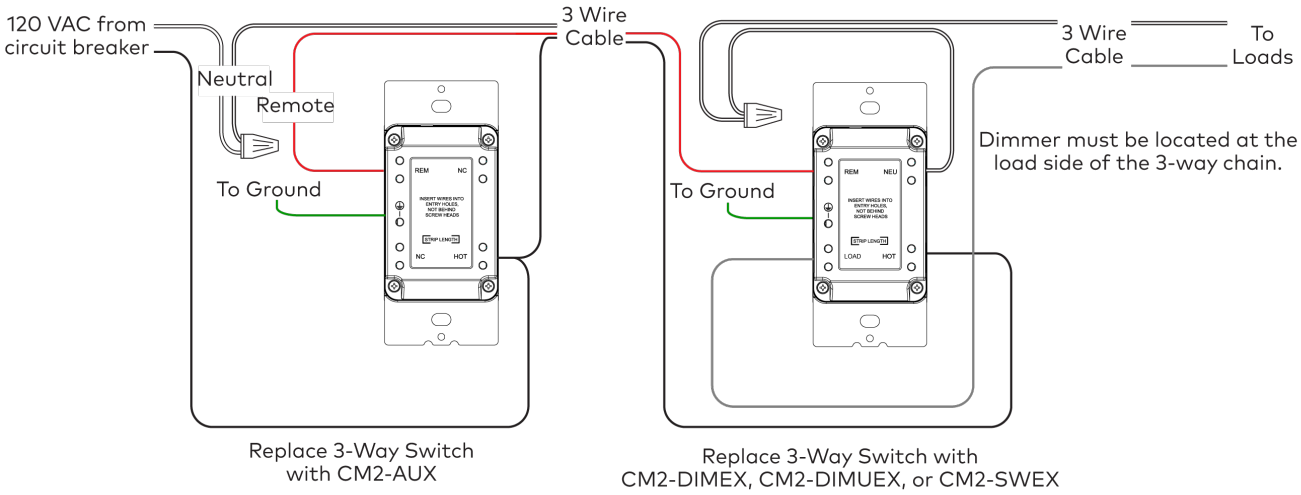

CM2-KPCN and CM2-KPFCN Wiring

The CM2-KPCN and CM2-KPFCN are powered using 24VDC from the Cresnet network cable.

To wire the device, follow the instructions below.

> **WARNING:** Take care when wiring as the **INPUT** ports accept the same connector as the **NET** ports.

1. Make connections to the **INPUT** port. The port accepts connections from contact closures, non-system occupancy sensors, and 10k thermistors.
2. Make connections to the **NET** ports. The ports accept 24V, Y, Z, and G connections from the Cresnet network. The ports provide pass-thru connection to daisy-chain additional Cresnet devices.

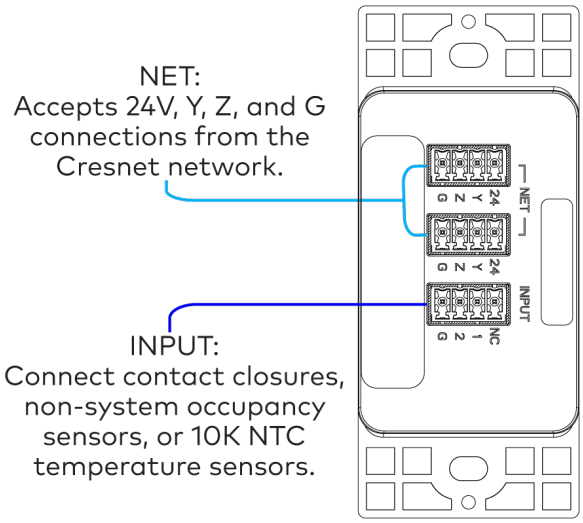
NET:
Accepts 24V, Y, Z, and G connections from the Cresnet network.
INPUT:
Connect contact closures, non-system occupancy sensors, or 10K NTC temperature sensors.
NET
24
Y
Z
G
INPUT
NC
1
2
G

CM2-BTN Installation

Cameo 2 devices ship with buttons already attached to the device. To swap out the buttons on most CM2 devices, follow the instructions below. For the CM2-KPFCN, refer to CM2-KPFCN on page 85.

> **NOTE: -RKR** (rocker) devices can only use large rocker buttons.

1. Remove the faceplate front.
2. Gently wedge a small flathead screwdriver between the bottom of the button and the device.
3. Lightly twist the screwdriver to detach the bottom of the button from the device.
4. Slide the screwdriver up and lightly twist again to detach the top of the button from the device.
5. Gently snap the replacement button into place.
6. Reattach the faceplate front.

CM2-KPFCN

To swap out the buttons on the CM2-KPFCN, follow the steps below.

> **NOTE:** The CM2-KPFCN does not utilize -TOP buttons. Use other CM2-BTNs, even in the top position.

1. Remove the CM2-KPFCN from the wall.
2. Unscrew the four screws on the rear of the keypad. The faceplate, keypad, and metal mounting bracket separate.

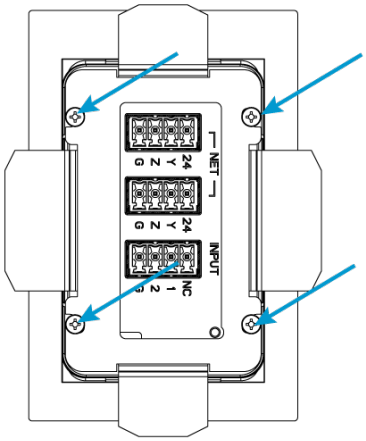

3. Gently wedge a small flathead screwdriver between the bottom of the button and the device.
4. Lightly twist the screwdriver to detach the bottom of the button from the device.
5. Slide the screwdriver up and lightly twist again to detach the top of the button from the device.
6. Gently snap the replacement button into place.

7. Reassemble the faceplate, CM2-KPFCN, and metal mounting bracket. Replace the screws.

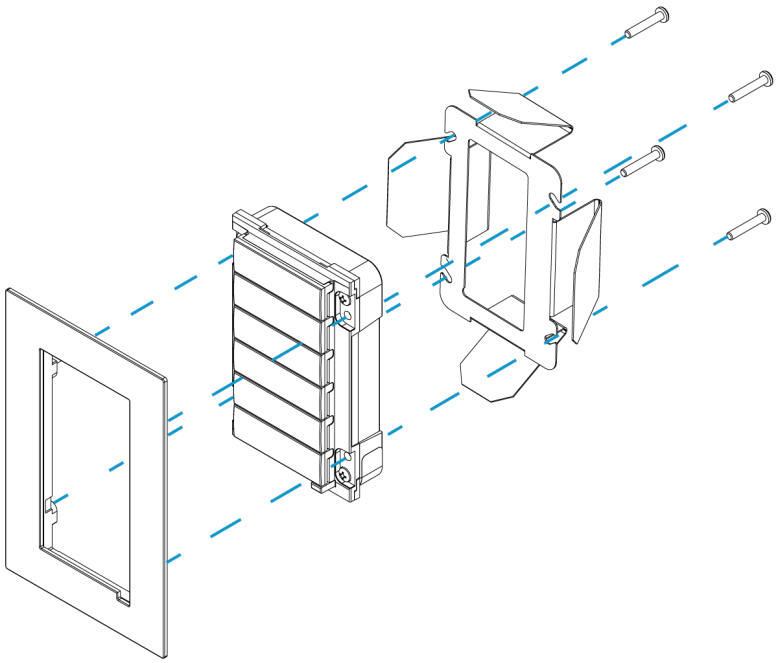

8. Reinstall the CM2-KPFCN. For instructions, refer to Installing the CM2-KPFCN on page 74.

Air Gap Cover Installation

Cameo 2 devices ship with the air gap cover preinstalled, but it can be swapped out for a different color if desired.

To remove the air gap cover, follow the instructions below.

1. Remove the faceplate front.
2. Using a small flathead screwdriver, pull the air gap up.

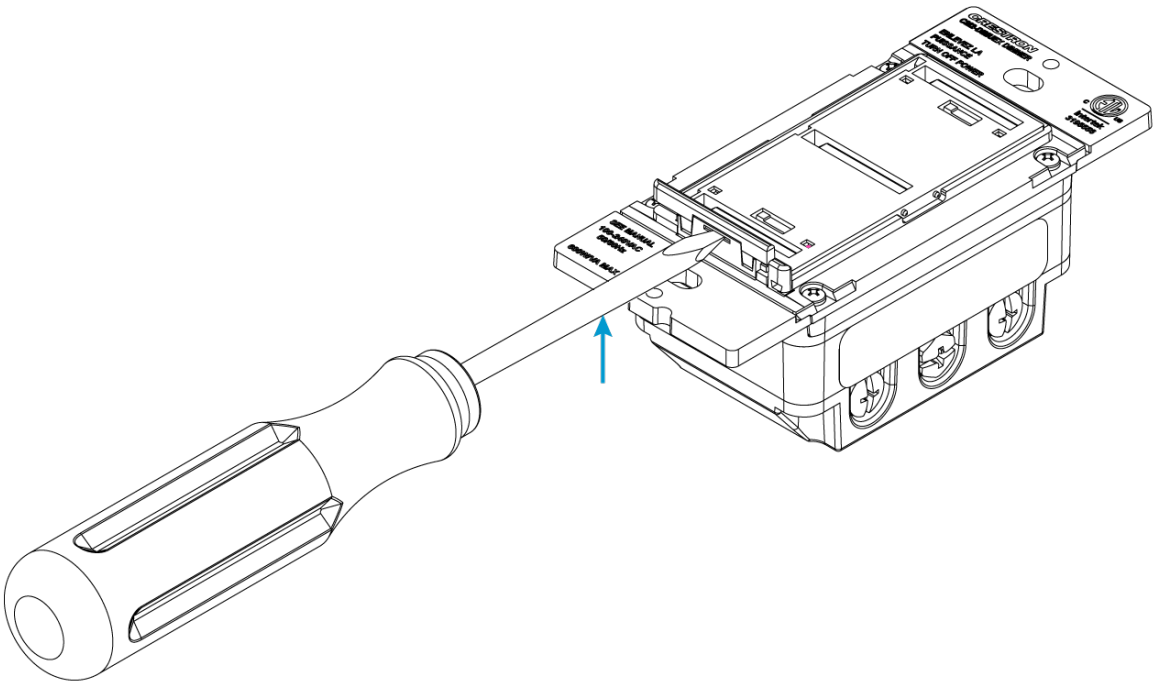

3. Wedge the small flathead screwdriver between the left side of the air gap cover and the device.

4. Gently rotate the screwdriver to pry the air gap cover away from the device until that side pops off.

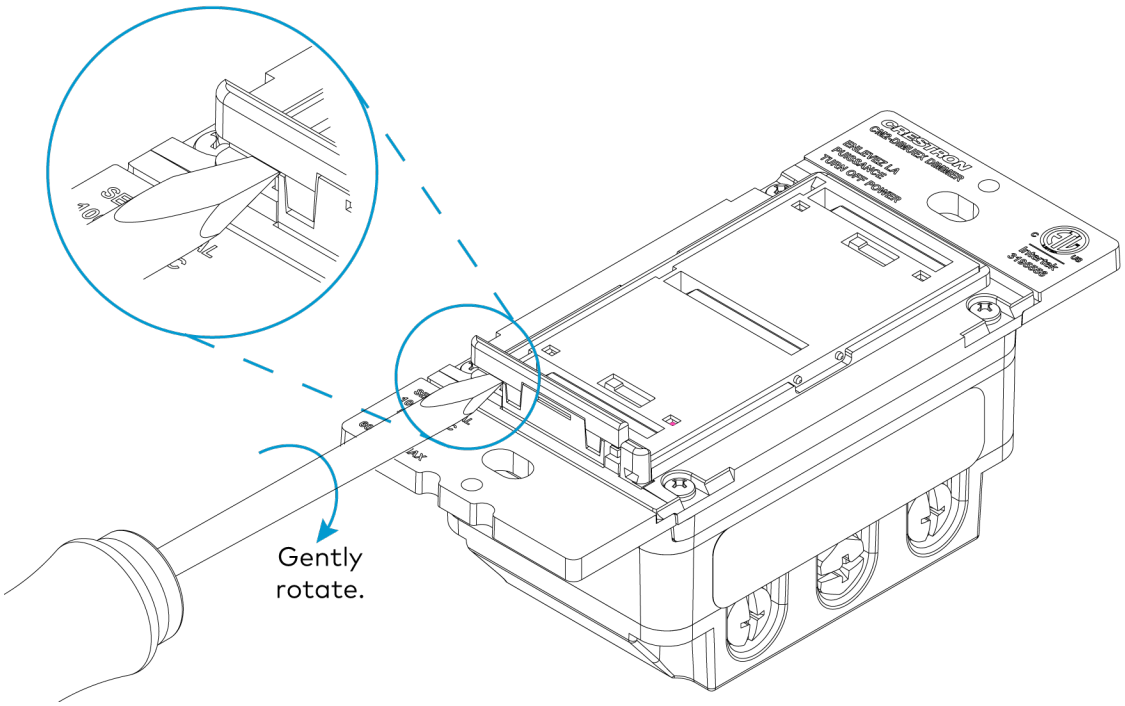

5. Wedge the small flathead screwdriver between the right side of the air gap cover and the device.
6. Gently pry the air gap cover away from the device until it detaches.

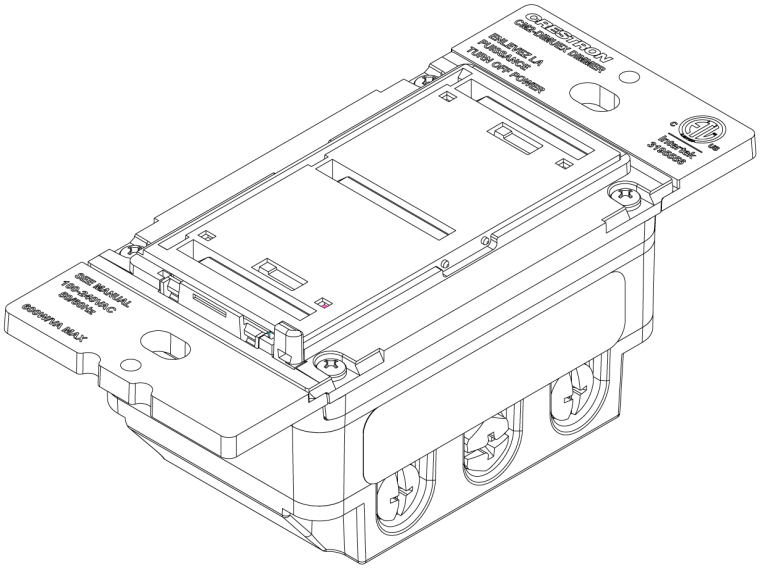

7. Snap the replacement air gap cover into place. Ensure proper orientation with the rounded side on the left.

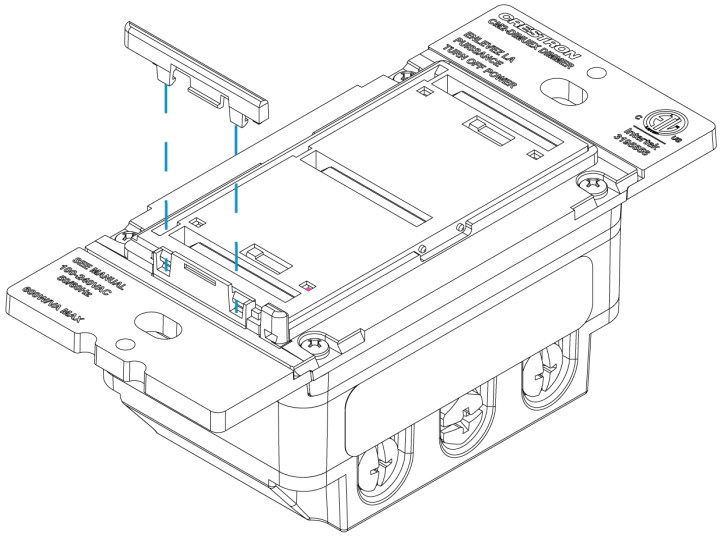
CAUTION
SEE MANUAL
TO REPLACE
FUSE
TURN OFF POWER
SEE MANUAL
TO REPLACE
FUSE
RISK OF FIRE
REPLACE WITH
SAME TYPE
AND RATING

Configuration

Prior to configuration, ensure the device is running the latest firmware. Check for the latest firmware at www.crestron.com/firmware. Load the firmware onto the device using Crestron Toolbox™ software.

Most Cameo 2 configuration is accomplished through Crestron Home or custom programming.

This section provides the following information:

Disconnect Power Locally

Power to the connected load(s) can be disconnected by using the air-gap switch located on the front of the CM2-DIMEX and CM2-DIMUEX.

To disconnect power from the connected load(s):

1. Remove the faceplate front.
2. Pull out the air gap switch with a fingernail or flathead screwdriver.

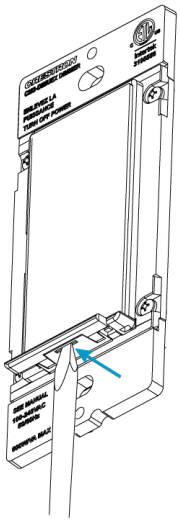

To restore power to the connected load(s):

1. Push the air gap switch in.
2. Reattach the faceplate front.

Notes:

- When the air gap switch is pulled out, the CM2-DIMUEX or CM2-DIMEX remain powered if there is a neutral connected.
- The air gap switch must be pushed in for power to be delivered to the load.

Backlight Color Theme

The backlight color theme can be adjusted locally or through programming.

> **NOTE:** Customization beyond what can be done locally is possible through custom programming. Custom programming will override local settings.

To locally change the color theme of the LED backlights:

1. Enter local setup mode by pressing and holding the top and bottom buttons for five seconds. The LEDs fade in and out while in local setup mode.
2. Tap the top button to cycle to the next color theme. Tap the bottom button to go back to the previous theme.
3. Wait 15 seconds to end local setup mode and save the color theme.

Dimmer Configuration

This section contains configuration information specific to the CM2-DIMEX and CM2-DIMUEX.

Dimming Mode

The CM2-DIMEX and CM2-DIMUEX keypads have multiple dimming modes. Dimming modes can be changed in programming or locally. To change dimming modes locally, follow the instructions below.

1. Enter local setup mode by pressing and holding the top and bottom buttons for five seconds. The LEDs fade in and out while in local setup mode.
2. Press and hold the top button for two seconds to switch to the next dimming mode. Once the desired mode is indicated by the LEDs, release the button to select it.
    - Pink: Automatic (CM2-DIMUEX required)
    - Green: Forward Dimming
    - Yellow: Reverse Dimming (CM2-DIMUEX required)
    - White: Non-Dimming

    > **NOTE:** The dimming mode cannot be adjusted locally if already set by custom programming. The LEDs will all flash red to indicate the mode cannot be changed.

3. Wait 15 seconds to end local setup mode and save the dimming mode.

No Neutral Calibration

The CM2-DIMEX and CM2-DIMUEX automatically switch to a Low Power Mode if not using a neutral connection. This mode limits device backlight behavior and the maximum dimmed output level. To ensure the maximum possible dim level with the connected load, perform the steps below to run a calibration the first time you connect a load and any time you change it.

> **NOTE:** If your device is connected to a control processor, calibration can be triggered through custom programming or Crestron Home.

To locally trigger a No Neutral Calibration, follow the instructions below.

1. Tap the bottom button (or the bottom of the rocker) three times and then press and hold it down (tap-tap-tap-press+hold) for ten seconds.
2. All the LEDs will turn white and pulse slightly. The device is now performing the No Neutral calibration sequence. The load will ramp from off to 100% in approximately 15 seconds, after which the unit may turn off and reboot. Depending on the dimmer phase mode setting, the process may repeat.
3. When the dimmer comes back online, the calibration sequence is complete and the device is ready to use.

> **NOTE:** Some LED loads do not work well with dimmers that have no neutral wire connected. If the CM2-DIMUEX or CM2-DIMEX become unresponsive during the No Neutral Calibration, reset by pulling out and then pushing in the air gap. Successful calibration should prevent this from happening again during normal operation.
>
> If this does happen again during normal operation, change the current Dimming Mode and lower the selected No Neutral Power Mode. Run the No Neutral Calibration again.
>
> If the issue persists during normal operation or the No Neutral Calibration is not working, additional corrective action is required. Add additional loads, switch to different loads, or install a third-party load bypass (for example, Aeotec Bypass ZW150-Z) pursuant to the third-party manufacturer's specifications and instructions.

No Neutral Power Modes

The CM2-DIMUEX and CM2-DIMEX have five settable power modes to optimize performance when no neutral is connected. These can only be adjusted through custom programming or Crestron Home.

- **Normal:** This mode does not limit backlight behavior. It should be used with high wattage loads, such as incandescents, or when a load bypass device has been installed.
- **Low Power with Aux:** This mode is the default setting. This mode limits the maximum achievable backlight brightness, prevents non-feedback backlit text in Day Mode, and limits indication to the Indicators or Text.
- **Low Power without Aux:** This mode has the same backlight limitations as **Low Power with Aux**. Choose this mode if there isn't a connected CM2-KPEX or CM2-AUX to achieve a higher possible max dimmed output level.
- **Lowest Power with Aux:** This mode prevents any backlight in day mode and all feedback in day and night modes. Choose this mode if the load isn't getting bright enough and you cannot install a a third-party load bypass (for example, Aeotec® Bypass ZW150-Z) pursuant to the third-party manufacturer's specifications and instructions.
- **Lowest Power without Aux:** This mode has the same backlight limitations as **Lowest Power with Aux**. Choose this mode if there isn't a connected CM2-KPEX or CM2-AUX to achieve a higher possible max dimmed output level.

After changing power modes, run the No Neutral Calibration.

Wireless Communications

Most Cameo 2 devices connect to the Crestron network via the infiNET EX communications protocol. Use the following procedures to join or leave an infiNET EX network and to verify communications between the device and the control system.

Joining an infiNET EX Network

Before a device can be used in a lighting system, it must first join an infiNET EX network by being acquired by an infiNET EX gateway.

> **NOTE:** A device can be acquired by only one gateway.

1. Put the infiNET EX gateway into **Acquire** mode from the unit itself or from Crestron Toolbox software, as described in the gateway's manual.
2. Place the device into **Acquire** mode.
   a. Tap the top button (or the top of the rocker) three times and then press and hold it down (tap-tap-tap-press+hold) until all of the LEDs flash red once. This can take up to ten seconds if the device has been previously acquired to a gateway.
   b. Release the button to start the acquire process. The top button's LED flashes red slowly to show that the device is actively scanning the infiNET EX network.
      - The top button's LED lights red for five seconds to show that the device has been successfully acquired to the infiNET EX network.
      - The top button's LED flashes red quickly to indicate that the device was not successfully acquired by the infiNET EX network. Tap the setup button to acknowledge failure to acquire the infiNET EX network. Before attempting the acquire process again, ensure one of the following:
        - The gateway is in **Acquire** mode and within range.
        - A non-battery powered infiNET EX device is in **Acquire** mode on the same gateway.
3. Once all devices have been acquired, take the gateway out of **Acquire** mode. For details, refer to the gateway's manual.

Leaving an infiNET EX Network

To leave an infiNET EX network, put the device into **Acquire** mode. Ensure that no gateway is in **Acquire** mode when removing a device from an infiNET EX network.

To place the device into **Acquire** mode, refer to Joining an infiNET EX Network on page 95.

Verifying Communications Status

To check the communications status of the device, tap the top button three times and then press and hold it down (tap-tap-tap-press+hold) for up to two seconds. The button must be released before the

LEDs flash to indicate the communications status. Refer to the following table for details.

> **NOTE:** If there is a communication error and a remote button is pressed, all of the LEDs will flash red in one of the patterns described in the table below.

LED	Communication Status
Turns on for five seconds	The device is communicating with the control system.
Flashes three times	The device is communicating with the gateway, but the gateway is not communicating with the control system.
Flashes twice	The device was previously joined to the network but is not communicating with the gateway.
Flashes once	The device is not joined to the network.

Demo Mode

The CM2-KPCN and CM2-KPFCN offer a demo mode that highlights various features of the keypad.

> **NOTES:**
>
> - Demo mode requires firmware version 1.000.0211 or later.
> - Demo mode should not be used when the keypad is part of a control processor program.
> - The device will remember the button configuration and which demo mode option it is in through a power cycle.

Entering

To enter demo mode, perform the following sequence with the bottom button: tap three times, then press and hold it down for five seconds. The LEDs flash green several times to signify demo mode has started.

Button Configuration

After entering demo mode, quickly press each button to register the button configuration. The bottom position of each button will illuminate green to indicate the button press was detected. All registered buttons will flash green after ten seconds.

Exiting

To exit demo mode, repeat the sequence with the bottom button: tap three times, then press and hold it down for five seconds. The LEDs flash red to signify demo mode has ended and the keypad will reboot.

Demo Mode Options

There are six options in demo mode. Each option changes some or all of the following:

- Behavior of the backlights and indicators.
- What happens when a button is pressed, referred to in this section as indication.
- Color theme. For information on color themes, refer to Backlight Color Theme on page 92.

The keypad begins in option one. To switch options, press and hold the associated button (for example, top button for option one) for five seconds. The backlight flashes blue to announce an option switch.

> **NOTE:** Medium or large buttons must be removed to access all demo mode options. They can be reinstalled after selecting the mode.

- **Option One:** Top Button
  - Backlit text stays off during day mode and turns on during night mode. This mimics the default behavior of the keypad.
  - Indication is provided through the indicators only.
  - Color themes can be adjusted as normal. Refer to Backlight Color Theme on page 92.
  - Pushing any button toggles indication for that button position.
- **Option Two:** Second Button from the Top
  - Backlit text is on in both day and night modes.
  - Indication is provided through both backlit text and indicators and is brighter than the non-indication backlit text level.
  - Color themes can be adjusted as normal. Refer to Backlight Color Theme on page 92.
  - Pushing any button toggles indication for that button position.
- **Option Three:** Third Button from the Top
  - Backlight is on in both day and night modes.
  - Indication is provided through the indicators only and is the same brightness as the backlit text level.
  - Color themes can be adjusted as normal. Refer to Backlight Color Theme on page 92.
  - Pushing any button toggles indication for that button position.
- **Option Four:** Third Button from the Bottom
  - Backlight is on in both day and night modes.
  - Indication is provided through both backlit text and indicators. The indicators are the same brightness as the backlit text level and in a different color.
  - Backlight color is set to the **Dim-to-Warm** color theme. This theme uses a higher color temperature when the room is brighter and a warmer color temperature when the room is darker.
  - Indication color defaults to cyan, but can be adjusted as normal. Refer to Backlight Color Theme on page 92.
  - Pushing any button toggles indication for that button position.
- **Option Five:** Second Button from the Bottom
  - Backlit text and indicator color cycle slowly from warm white to cool white and then back in a continuous smooth loop.
  - Indication is provided through the indicators only and is the same brightness as the backlit text level.
  - Pushing any button toggles indication for that button position.
- **Option Six:** Bottom Button
  - Backlit text color cycles through warm/cool white then all fully saturated colors in a continuous smooth loop.
  - Indication is provided through the indicators only and is the same brightness as the backlit text level.
  - Pushing any button toggles indication for that button position.

Troubleshooting

The device displays error codes using the output LEDs. The LED flashes a pattern to indicate the error on that output. For example, a 2-1 error flashes the LED two times, pauses for one second, flashes once, pauses for two seconds, and then repeats for 90 seconds (except where otherwise noted). Refer to the following table for possible corrections.

Error Code	Fault Name	Fault Description
2-1	Over Current	A short circuit has been detected. Verify that there are no shorts in the wiring and that the total load output matches the proper ganged ratings.
2-2	Shorted FET	A flowing current is detected when an FET should be off. The load will power to 100%. This error code is permanent until the device is power cycled. Disconnect the load and contact Crestron Technical Support.
2-3	Over Temperature	The dimmer has overheated and shut down due to an excessive load. Verify that the total load matches the proper ganged rating. The dimmer resumes normal operation after cooling.
2-4	Over Voltage	High voltage spikes have been detected and output has been shut down. If a magnetic load is connected, verify that the dimming phase has been set to Forward Phase mode.
2-5	Overload	A load is detected beyond the allowable load rating. This error code will cause the device to shut down. Verify that the total load output matches the proper ganged rating.
3-1	Zero Cross Fault	The dimmer is unable to lock onto the AC line. If the unit is powered by a generator, verify that the generator output is 50/60 Hz and stable.
3-3	Device Error	The device is experiencing a hardware issue. Please contact Crestron Technical Support.

Resources

The following resources are provided for the Cameo® 2.

> **NOTE:** You may need to provide your Crestron.com web account credentials when prompted to access some of the following resources.

Crestron Support and Training

- Crestron True Blue Support
- Crestron Resource Library
- Crestron Online Help (OLH)
- Crestron Technical Institute (CTI) Portal

Programmer and Developer Resources

- help.crestron.com: Provides help files for Crestron programming tools such as SIMPL, SIMPL#, and Crestron Toolbox™ software
- developer.crestron.com: Provides developer documentation for Crestron APIs, SDKs, and other development tools

Product Certificates

To search for product certificates, refer to the Product Certificates section of the Crestron Resource Library.

Related Documentation

- Crestron Technical Documentation

Crestron Electronics, Inc.
15 Volvo Drive, Rockleigh, NJ 07647
Tel: 888.CRESTRON
Fax: 201.767.7656
www.crestron.com

Product Manual — Doc. 9546D
04/03/26
Specifications subject to
change without notice.