Crestron **C2N-IO**
Control Port Expansion Module
Installation Guide

Further Inquiries
If you cannot locate specific information or have questions after reviewing this guide, please take advantage of Crestron's award winning customer service team by calling Crestron at 1-888-CRESTRON [1-888-273-7876]. For assistance in your region, please refer to the Crestron Web site (www.crestron.com) for a listing of Crestron worldwide offices.

You can also log onto the online help section of the Crestron Web site (www.crestron.com/onlinehelp) to ask questions about Crestron products. First-time users will need to establish a user account to fully benefit from all available features.

Future Updates
As Crestron improves functions, adds new features and extends the capabilities of the C2N-IO units, additional information may be made available as manual updates. These updates are solely electronic and serve as intermediary supplements prior to the release of a complete technical documentation revision.

Check the Crestron Web site periodically for manual update availability and its relevance. Updates are identified as an “Addendum” in the Download column.

Crestron Electronics, Inc.
15 Volvo Drive Rockleigh, NJ 07647
Tel: 888.CRESTRON
Fax: 201.767.7576
www.crestron.com

Installation Guide - DOC. 7236A
(2031434)
11.11
Specifications subject to change without notice.

Regulatory Compliance

The C2N-IO has been tested by Intertek Testing Services NA Inc. and complies with ANSI/UL 2043, the Standard for Fire Test for Heat and Visible Smoke Release for Discrete Products and Their Accessories Installed in Air-Handling Spaces-Third Edition.

As of the date of manufacture, the C2N-IO has been tested and found to comply with specifications for CE marking and standards per EMC and Radiocommunications Compliance Labelling.

Federal Communications Commission (FCC) Compliance Statement
This device complies with part 15 of the FCC rules. Operation is subject to the following two conditions: (1) This device may not cause harmful interference and (2) this device must accept any interference received, including interference that may cause undesired operation.

CAUTION: Changes or modifications not expressly approved by the manufacturer responsible for compliance could void the user's authority to operate the equipment.

(Continued on following page)

DESCRIPTION

The C2N-IO is a very compact device that adds control ports to any Crestron® 2-Series or 3-Series™ control system. It connects via the Cresnet® control network and provides one RS-232, one IR and two relay control ports. It can be mounted to any flat surface using two screws or adhesive reclosable fastener (3M® Dual Lock® included).

The C2N-IO is ideally designed for use with a Crestron TPCS-4SM or TPCS-4SMD touch screen control system, providing an advanced wall mount control package that fits in a 2-gang US or UK electrical box. The C2N-IO can be mounted inside the electrical box, behind the touch screen or it can be installed remotely, requiring just one Cresnet control cable for power and communications.

Specifications

Specifications for the C2N-IO are listed in the following table.

C2N-IO Specifications

SPECIFICATION	DETAILS
Communications Cresnet RS-232 IR/Serial	 Cresnet slave device, 2-Series and 3-Series compatible Supports 2-way device control and monitoring up to 115.2k baud with software handshaking Suports 1-way device control via infrared up to 1.2 MHz or serial TTL/RS-232 (0-5 Volts) up to 115.2k baud
Power Cresnet Power Usage	 1 Watt (42 mA @ 24 Volts DC)
Default NET ID	A5*
Device Database	Version 37.05.001 or later
Crestron Database	Version 28.05.001 or later
Environmental Temperature Humidity Heat Dissipation	 32° to 104° F (0° to 40° C) 0% to 90% RH (non-condensing) 3.5 BTU/Hr
Enclosure	Metal, freestanding or surface mount; Fits inside 2-gang electrical box, 1.38 in (35 mm) minimum internal box depth required for C2N-IO and TPCS-4SM(D) combined
Dimensions Height Width Depth	 2.25 in (58 mm) 3.50 in (89 mm), 4.38 in (112 mm) with bracket 0.83 in (21 mm)
Weight	3 oz. (75 g)
Included Accessories	Mounting bracket, Dual Lock fastener

* Refer to "Identity Code" in the last column on this page for details.

Physical Description

This section provides information on the connections, controls and indicators available on your C2N-IO.

C2N-IO Overall Dimensions

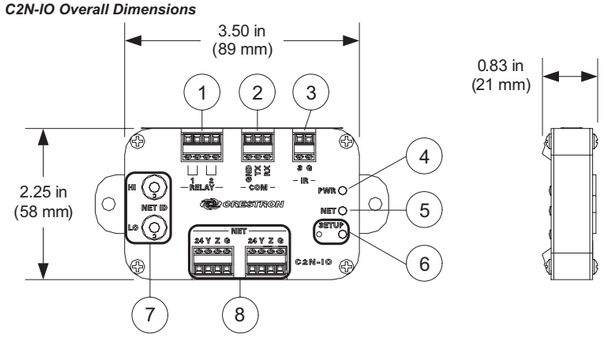

C2N-IO Overall Dimensions (with Mounting Bracket)

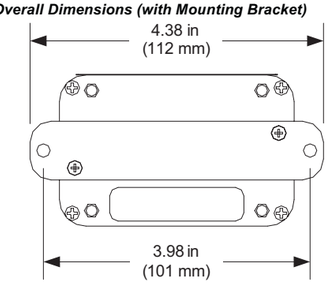

Connectors, Controls & Indicators

#	CONNECTORS[1], CONTROLS & INDICATORS	DESCRIPTION
1	RELAY 1 2	(1) 4-pin captive screw terminal block comprising (2) normally open, isolated relays; Rated 1 Amp, 30 Volts AC/DC, Solid state arc suppression across contacts
2	COM GND TX RX	(1) 3-pin captive screw terminal block; Bidirectional RS-232 port; Up to 115.2k baud, software handshaking support
3	IR S G	(1) 2-pin captive screw terminal block, IR/Serial output port; IR output up to 1.2 MHz; 1-way serial TTL/RS-232 (0 - 5 Volts) up to 115.2 k baud
4	PWR LED	(1) Green LED, indicates operating power supplied via Cresnet control network
5	NET LED	(1) Amber LED, indicates communication with Cresnet system
6	SETUP (LED and Button)	(1) Red LED and (1) recessed miniature push button for touch-settable ID (TSID)
7	NET ID HI LO	(2) Rotary switches for manually setting Cresnet ID; '00' setting enables TSID
8	NET 24 Y Z G	(2) 4-pin captive screw terminal blocks; Cresnet slave ports, paralleled **24** Power (24 Volts DC) **Y** Data **Z** Data **G** Ground

SETUP

Network Wiring

When wiring the Cresnet network, consider the following:

- Use Crestron Certified Wire.
- Use Crestron power supplies for Crestron equipment.
- Provide sufficient power to the system.

CAUTION: Insufficient power can lead to unpredictable results or damage to the equipment. Please use the Crestron Power Calculator to help calculate how much power is needed for the system (www.crestron.com/calculators).

For networks with 20 or more devices, use a Cresnet Hub/Repeater (CNXHUB) to maintain signal quality.

For more details, refer to "Check Network Wiring" on the next page.

Identity Code

The Net ID of the C2N-IO has been factory set to **A5** (with a mechanical setting of **00**).

NOTE: The **NET ID** controls on the C2N-IO are factory set to 00. This allows changing the Net ID with Crestron Toolbox™ (optional).

The Net ID of the C2N-IO can be set using one of two methods:

- **Manual setting**: Set the two **NET ID** controls (from 03 to FE) to match the Net ID
  in the SIMPL Windows program.
- **Touch-settable ID**: Set the two **NET ID** controls to 00 and set the Net ID using Crestron Toolbox. This is the factory setting. For more details, refer to the Crestron Toolbox help file.

When setting the Net ID, consider the following:

- The Net ID of each unit must match an ID code specified in the control system program.
- Each network device must have a unique Net ID.

Installation

The C2N-IO can be installed inside a standard 2-gang US or UK electrical box using the included Dual Lock fastener or mounted to another other suitable location using the included mounting bracket.

To use the included mounting bracket, use the included screws to attach the mounting bracket as shown in the following illustration. The only tool required is a #1 Phillips screwdriver.

Attach Mounting Bracket to C2N-IO (Optional)

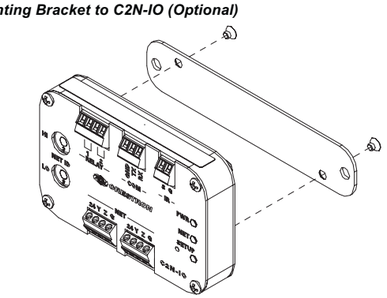

NOTE: Screws to secure the C2N-IO to a surface are not included.

Hardware Hookup

Make the necessary connections as shown in the illustration that follows this paragraph. Refer also to "Check Network Wiring" on the next page, before attaching the 4-position **NET** connector. Apply power after all connections have been made.

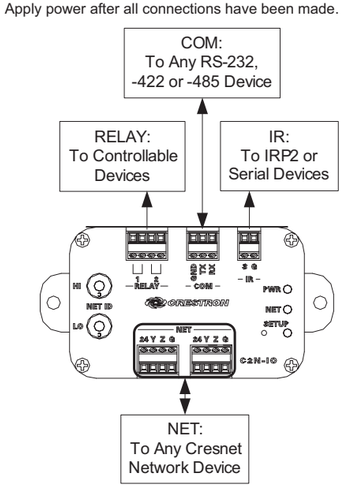

CAUTION: Incorrect wiring may damage the C2N-IO.

PROBLEM SOLVING

Troubleshooting

The following table provides corrective action for possible trouble situations. If further assistance is required, please contact a Crestron customer service representative.

NOTE: Operation is ultimately determined by the control system program; this must be considered when troubleshooting.

TROUBLE	POSSIBLE CAUSE(S)	CORRECTIVE ACTION
Device does not turn on (**PWR** LED is not lit).	Device is not receiving power from a Crestron power source.	Use a Crestron power source. Verify connections.
	Device is not receiving sufficient power.	Use the Crestron Power Calculator to help calculate how much power is needed for the system.
Device does not function as expected.	Device is not configured correctly.	Verify rotary switch settings and device wiring.
	Incorrect programming in control system.	Check control system logic or contact Crestron for assistance.

Check Network Wiring

Use the Right Wire

In order to ensure optimum performance over the full range of your installation topology, use Crestron Certified Wire only. Failure to do so may incur additional charges if support is required to identify performance deficiencies because of using improper wire.

Calculate Power

CAUTION: Use only Crestron power supplies for Crestron equipment. Failure to do so could cause equipment damage or void the Crestron warranty.

CAUTION: Provide sufficient power to the system. Insufficient power can lead to unpredicatable results or damage the equipment. Use the Crestron Power Calculator (www.crestron.com/calculators) to help calculate how much power is needed for the system.

When calculating the length of wire for a particular Cresnet run, the wire gauge and the Cresnet power usage of each network unit to be connected must be taken into consideration. Use Crestron Certified Wire only. If Cresnet units are to be daisy chained on the run, the Cresnet power usage of each network unit to be daisy chained must be added together to determine the Cresnet power usage of the entire chain. If the unit is home run from a Crestron system power supply network port, the Cresnet power usage of that unit is the Cresnet power usage of the entire run. The wire gauge and the Cresnet power usage of the run should be used in the following equation to calculate the cable length value on the equation's left side.

Cable Length Equation

$$L < \frac{40{,}000}{R \times P}$$

Where: L = Length of run (or chain) in feet
R = 6 Ohms (Crestron Certified Wire: 18 AWG (0.75 mm^2))
or 1.6 Ohms (Cresnet HP: 12 AWG (4 mm^2))
P = Cresnet power usage of entire run (or chain)

Make sure the cable length value is less than the value calculated on the right side of the equation. For example, a Cresnet run using 18 AWG Crestron Certified Wire and drawing 20 Watts should not have a length of run more than 333 feet (101 meters). If Cresnet HP is used for the same run, its length could extend to 1250 feet (381 meters).

NOTE: All Crestron certified Cresnet wiring must consist of two twisted pairs. One twistsed pair is the +24V conductor and the GND conductor and the other twisted pair is the Y conductor and the Z conductor.

Strip and Tin Wire

When daisy chaining Cresnet units, strip the ends of the wires carefully to avoid nicking the conductors. Twist together the ends of the wires that share a pin on the network connector and tin the twisted connection. Apply solder only to the ends of the twisted wires. Avoid tinning too far up the wires or the end becomes brittle. Insert the tinned connection into the Cresnet connector and tighten the retaining screw. Repeat the procedure for the other three conductors.

Add Hubs

Use of a Cresnet Hub/Repeater (e.g., CNXHUB) is advised whenever the number of Cresnet devices on a network exceeds 20 or when the combined total length of Cresnet cable exceeds 3000 feet (914 meters).

Regulatory Compliance (Continued)

NOTE: This equipment has been tested and found to comply with the limits for a Class B digital device, pursuant to part 15 of the FCC Rules. These limits are designed to provide reasonable protection against harmful interference in a residential installation. This equipment generates, uses and can radiate radio frequency energy and if not installed in and used accordance with the instructions, may cause harmful interference to radio communications. However, there is no guarantee that interference will not occur in a particular installation. If this equipment does cause harmful interference to radio or television reception, which can be determined by turning the equipment off and on, the user is encouraged to try to correct the interference by one or more of the following measures:

- Reorient or relocate the receiving antenna
- Increase the separation between the equipment and receiver
- Connect the equipment to an outlet on a circuit different from that to which the receiver is connected
- Consult the dealer or an experienced radio/TV technician for help

Industry Canada (IC) Compliance Statement

This Class B digital apparatus complies with Canadian ICES-003.

Cet appareil numérique de la classe B est conforme à la norme NMB-003 du Canada.

RETURN and WARRANY POLICIES

Merchandise Returns / Repair Service

1. No merchandise may be returned for credit, exchange or service without prior authorization from CRESTRON. To obtain warranty service for CRESTRON products, contact an authorized CRESTRON dealer. Only authorized CRESTRON dealers may contact the factory and request an RMA (Return Merchandise Authorization) number. Enclose a note specifying the nature of the problem, name and phone number of contact person, RMA number and return address.
2. Products may be returned for credit, exchange or service with a CRESTRON Return Merchandise Authorization (RMA) number. Authorized returns must be shipped freight prepaid to CRESTRON, 6 Volvo Drive, Rockleigh, N.J. or its authorized subsidiaries, with RMA number clearly marked on the outside of all cartons. Shipments arriving freight collect or without an RMA number shall be subject to refusal. CRESTRON reserves the right in its sole and absolute discretion to charge a 15% restocking fee plus shipping costs on any products returned with an RMA.
3. Return freight charges following repair of items under warranty shall be paid by CRESTRON, shipping by standard ground carrier. In the event repairs are found to be non-warranty, return freight costs shall be paid by the purchaser.

CRESTRON Limited Warranty

CRESTRON ELECTRONICS, Inc. warrants its products to be free from manufacturing defects in materials and workmanship under normal use for a period of three (3) years from the date of purchase from CRESTRON, with the following exceptions: disk drives and any other moving or rotating mechanical parts, pan/tilt heads and power supplies are covered for a period of one (1) year; touch screen display and overlay components are covered for 90 days; batteries and incandescent lamps are not covered.

This warranty extends to products purchased directly from CRESTRON or an authorized CRESTRON dealer. Purchasers should inquire of the dealer regarding the nature and extent of the dealer's warranty, if any.

CRESTRON shall not be liable to honor the terms of this warranty if the product has been used in any application other than that for which it was intended or if it has been subjected to misuse, accidental damage, modification or improper installation procedures. Furthermore, this warranty does not cover any product that has had the serial number altered, defaced or removed.

This warranty shall be the sole and exclusive remedy to the original purchaser. In no event shall CRESTRON be liable for incidental or consequential damages of any kind (property or economic damages inclusive) arising from the sale or use of this equipment. CRESTRON is not liable for any claim made by a third party or made by the purchaser for a third party.

CRESTRON shall, at its option, repair or replace any product found defective, without charge for parts or labor. Repaired or replaced equipment and parts supplied under this warranty shall be covered only by the unexpired portion of the warranty.
Except as expressly set forth in this warranty, CRESTRON makes no other warranties, expressed or implied, nor authorizes any other party to offer any warranty, including any implied warranties of merchantability or fitness for a particular purpose. Any implied warranties that may be imposed by law are limited to the terms of this limited warranty. This warranty statement supersedes all previous warranties.

Crestron, the Crestron logo, 3-Series, Cresnet and Crestron Toolbox are either trademarks or registered trademarks of Crestron Electronics, Inc. in the United States and/or other countries. 3M and Dual Lock are either trademarks or registered trademarks of 3M Company in the United States and/or other countries. Other trademarks and trade names may be used in this document to refer to either the entities claiming the marks and names or their products. Crestron disclaims any proprietary interest in the marks and names of others.
© 2011 Crestron Electronics, Inc.